Newland

SCANNING MADE SIMPLE

FM3051 / FM3056 Grouper II

fixed mount barcode scanners

user guide

Disclaimer

© 2017-2018 Fujian Newland Auto-ID Tech. Co., Ltd. All rights reserved.

Please read through the manual carefully before using the product and operate it according to the manual. It is advised that you should keep this manual for future reference.

Do not disassemble the device or remove the seal label from the device, doing so will void the product warranty provided by Fujian Newland Auto-ID Tech. Co., Ltd.

All pictures in this manual are for reference only and actual product may differ. Regarding to the product modification and update, Fujian Newland Auto-ID Tech. Co., Ltd. reserves the right to make changes to any software or hardware to improve reliability, function, or design at any time without notice. The information contained herein is subject to change without prior notice.

The products depicted in this manual may include software copyrighted by Fujian Newland Auto-ID Tech. Co., Ltd or third party. The user, corporation or individual, shall not duplicate, in whole or in part, distribute, modify, decompile, disassemble, decode, reverse engineer, rent, transfer or sublicense such software without prior written consent from the copyright holders.

This manual is copyrighted. No part of this publication may be reproduced, distributed or used in any form without written permission from Newland.

Fujian Newland Auto-ID Tech. Co., Ltd. reserves the right to make final interpretation of the statement above.

Fujian Newland Auto-ID Tech. Co., Ltd.
3F, Building A, No.1, Rujiang West Rd., Mawei, Fuzhou, Fujian, China 350015
http://www.newlandaidc.com

Revision History

Version	Description	Date
V1.0.0	Initial release.	July 27, 2017
V1.0.1	Added the **Enable/Disable PDF417 ECI Output**, **Enable/Disable QR ECI Output** and **Enable/Disable Data Matrix ECI Output** features in Chapter 8. Note: Firmware version V1.00.088 or later is required for the new features above.	November 10, 2017
V1.0.2	Updated the “Dimensions” section in Chapter 1.	April 11, 2018
V1.1.0	1. Updated the document structure. 2. Updated the **Enter Setup** and **Exit Setup** barcodes. 3. Added the **Read Barcode On/Off**, **Emulate Keypad with Leading Zero** and **Caps Lock** features in Chapter 5. 4. Updated the “Emulate ALT+Keypad”, “Function Key Mapping” and “VID/PID”. 5. Updated the “Symbologies” and “Data Formatter” chapters. Note: Firmware version V1.00.095 or later is required for the new features above.	July 18, 2018

Table of Contents

Revision History ..... **- 3 -**

Preface **1**

Introduction 1

Chapter Description 1

Explanation of Icons 2

Chapter 1 Getting Started **3**

Introduction 3

About This Guide 3

Unpacking 3

FM30 Scanner 4

Data Port Pinout 4

Dimensions (unit: mm) 5

FM3056-2X Scanner 5

FM3051-2X Scanner 6

IR Triggering Range 7

Optics 8

Connecting the FM30 to a Host Device 10

Using USB Cable 11

Using RS-232 Cable 12

Maintenance 13

Scanning Instructions 13

Chapter 2 EasySet **14**

Chapter 3 System Settings **15**

Introduction 15

Barcode Programming 15

Command Programming 15

EasySet Programming 15

Programming Barcode/ Programming Command/Function 16

Use of Programming Command 17

Command Syntax 17

Query Commands 17

Responses 18

Examples 18

Use of Programming Barcodes 19
Illumination 20
Power On Beep 20
Good Read Beep 21
Good Read Beep Duration 22
Good Read Beep Frequency 23
Good Read Beep Volume 23
Scan Mode 24
Decode Session Timeout 24
Image Stabilization Timeout (Sense Mode) 25
Timeout between Decodes (Continuous Mode) 27
Timeout between Decodes (Same Barcode) 28
Sensitivity 29
Scanning Preference 30
Read Barcode On/Off 30
Decode Area 30
Image Flipping 33
Bad Read Message 34
Set Bad Read Message 34
Default Settings 35
Factory Defaults 35
Custom Defaults 35
Query Product Information 36
Query Product Name 36
Query Firmware Version 36
Query Decoder Version 37
Query Hardware Version 37
Query Product Serial Number 37
Query Manufacturing Date 38
Query OEM Serial Number 38

Chapter 4 RS-232 Interface 39

Introduction 39
Baud Rate 40
Parity Check 41
Data Bit 42
Stop Bit 42
Hardware Auto Flow Control 43

Chapter 5 USB Interface **44**
Introduction 44
USB HID Keyboard 45
USB Country Keyboard Types 46
Beep on Unknown Character 50
Emulate ALT+Keypad 51
Emulate Keypad with Leading Zero 52
Code Page 52
Function Key Mapping 53
ASCII Function Key Mapping Table 54
ASCII Function Key Mapping Table (Continued) 55
Inter-Keystroke Delay 56
Convert Case 58
Emulate Numeric Keypad 59
Polling Rate 60
Caps Lock 61
USB CDC 62
HID POS (POS HID Barcode Scanner) 63
Introduction 63
Access the Scanner with Your Program 63
Acquire Scanned Data 64
Send Command to the Scanner 64
IBM SurePOS (Tabletop) 65
IBM SurePOS (Handheld) 65
VID/PID 65
Chapter 6 Symbologies **66**
Introduction 66
Global Settings 66
Enable/Disable All Symbologies 66
Enable/Disable 1D Symbologies 66
Enable/Disable 2D Symbologies 67
Video Reverse 68
Code 128 69
Restore Factory Defaults 69
Enable/Disable Code 128 69
Set Length Range for Code 128 70
Transmit Check Character 71

EAN-8 72
Restore Factory Defaults 72
Enable/Disable EAN-8 72
Transmit Check Character 72
2-Digit Add-On Code 73
5-Digit Add-On Code 74
Add-On Code Required 75
Convert EAN-8 to EAN-13 75
EAN-13 76
Restore Factory Defaults 76
Enable/Disable EAN-13 76
Transmit Check Character 77
2-Digit Add-On Code 77
5-Digit Add-On Code 78
Add-On Code Required 78
EAN-13 Beginning with 290 Add-On Code Required 79
EAN-13 Beginning with 378/379 Add-On Code Required 79
EAN-13 Beginning with 414/419 Add-On Code Required 80
EAN-13 Beginning with 434/439 Add-On Code Required 80
EAN-13 Beginning with 977 Add-On Code Required 81
EAN-13 Beginning with 978 Add-On Code Required 81
EAN-13 Beginning with 979 Add-On Code Required 82
UPC-E 83
Restore Factory Defaults 83
Enable/Disable UPC-E 83
Transmit Check Character 83
2-Digit Add-On Code 84
5-Digit Add-On Code 85
Add-On Code Required 85
Transmit System Character 86
Convert UPC-E to UPC-A 86
UPC-A 87
Restore Factory Defaults 87
Enable/Disable UPC-A 87
Transmit Check Character 87
2-Digit Add-On Code 88
5-Digit Add-On Code 89
Add-On Code Required 89

Transmit Preamble Character 90
Interleaved 2 of 5 91
Restore Factory Defaults 91
Enable/Disable Interleaved 2 of 5 91
Set Length Range for Interleaved 2 of 5 92
Check Character Verification 93
Febraban 94
Disable/Enable Febraban 94
Transmit Delay per Character 94
Transmit Delay per 12 Characters 97
ITF-14 99
Restore Factory Defaults 99
Enable/Disable ITF-14 99
ITF-6 100
Restore Factory Defaults 100
Enable/Disable ITF-6 100
Matrix 2 of 5 101
Restore Factory Defaults 101
Enable/Disable Matrix 2 of 5 101
Set Length Range for Matrix 2 of 5 102
Check Character Verification 103
Code 39 104
Restore Factory Defaults 104
Enable/Disable Code 39 104
Set Length Range for Code 39 105
Check Character Verification 106
Transmit Start/Stop Character 107
Enable/Disable Code 39 Full ASCII 107
Enable/Disable Code 32 (Italian Pharma Code) 108
Code 32 Prefix 108
Transmit Code 32 Start/Stop Character 109
Transmit Code 32 Check Character 109
Codabar 110
Restore Factory Defaults 110
Enable/Disable Codabar 110
Set Length Range for Codabar 111
Check Character Verification 112
Start/Stop Character 113

Code 93 114
Restore Factory Defaults 114
Enable/Disable Code 93 114
Set Length Range for Code 93 115
Check Character Verification 116
GS1-128 (UCC/EAN-128) 117
Restore Factory Defaults 117
Enable/Disable GS1-128 117
Set Length Range for GS1-128 118
Transmit Check Character 119
GS1 Databar (RSS) 120
Restore Factory Defaults 120
Enable/Disable GS1 Databar 120
Transmit Application Identifier “01” 120
Code 11 121
Restore Factory Defaults 121
Enable/Disable Code 11 121
Set Length Range for Code 11 122
Check Character Verification 123
Transmit Check Character 124
ISBN 125
Restore Factory Defaults 125
Enable/Disable ISBN 125
Set ISBN Format 126
2-Digit Add-On Code 126
5-Digit Add-On Code 127
Add-On Code Required 127
ISSN 128
Restore Factory Defaults 128
Enable/Disable ISSN 128
2-Digit Add-On Code 129
5-Digit Add-On Code 129
Add-On Code Required 130
Industrial 25 131
Restore Factory Defaults 131
Enable/Disable Industrial 25 131
Set Length Range for Industrial 25 132
Check Character Verification 133

Standard 25 134
Restore Factory Defaults 134
Enable/Disable Standard 25 134
Set Length Range for Standard 25 135
Check Character Verification 136
Plessey 137
Restore Factory Defaults 137
Enable/Disable Plessey 137
Set Length Range for Plessey 138
Check Character Verification 139
MSI-Plessey 140
Restore Factory Defaults 140
Enable/Disable MSI-Plessey 140
Set Length Range for MSI-Plessey 141
Check Character Verification 142
Transmit Check Character 143
AIM 128 144
Restore Factory Defaults 144
Enable/Disable AIM 128 144
Transmit Check Character 144
Set Length Range for AIM 128 145
PDF417 146
Restore Factory Defaults 146
Enable/Disable PDF417 146
Set Length Range for PDF417 147
PDF417 Twin Code 148
Character Encoding 148
QR Code 149
Restore Factory Defaults 149
Enable/Disable QR Code 149
Set Length Range for QR Code 150
QR Twin Code 151
Character Encoding 152
Micro QR 152
Data Matrix 153
Restore Factory Defaults 153
Enable/Disable Data Matrix 153
Set Length Range for Data Matrix 154

Data Matrix Twin Code 155
Rectangular Barcode 156
Character Encoding 156
Chinese Sensible Code 157
Restore Factory Defaults 157
Enable/Disable Chinese Sensible Code 157
Set Length Range for Chinese Sensible Code 158
Chinese Sensible Twin Code 159
Chapter 7 Data Formatter 160
Introduction 160
Add a Data Format 160
Programming with Barcodes 160
Programming with Serial Commands 163
Enable/Disable Data Formatter 164
Non-Match Error Beep 165
Data Format Selection 166
Change Data Format for a Single Scan 167
Clear Data Format 168
Query Data Formats 168
Formatter Command Type 6 169
Send Commands 169
Move Commands 172
Search Commands 174
Miscellaneous Commands 177
Chapter 8 Prefix & Suffix 183
Introduction 183
Global Settings 184
Enable/Disable All Prefixes/Suffixes 184
Prefix Sequence 184
Custom Prefix 185
Enable/Disable Custom Prefix 185
Set Custom Prefix 185
AIM ID Prefix 186
Code ID Prefix 187
Restore All Default Code IDs 187
Modify Code ID 187
Custom Suffix 193

Enable/Disable Custom Suffix 193
Set Custom Suffix 193
Data Packing 194
Introduction 194
Data Packing Options 194
Terminating Character Suffix 196
Enable/Disable Terminating Character Suffix 196
Set Terminating Character Suffix 196
Chapter 9 Batch Programming 198
Introduction 198
Create a Batch Command 199
Create a Batch Barcode 199
Use Batch Barcode 200
Appendix 201
Digit Barcodes 201
Save/Cancel Barcodes 204
Factory Defaults Table 205
AIM ID Table 212
Code ID Table 213
Symbology ID Number 214
ASCII Table 215
Unicode Key Maps 219

Preface

Introduction

This manual provides detailed instructions for setting up and using NLS-FM305X-2X fixed mount barcode scanner (hereinafter referred to as **"FM30 scanner"** or **"the FM30"** or **"the scanner"**).

Chapter Description

Chapter 1 Getting Started	*:* Gives a general description of FM30 scanner.
Chapter 2 EasySet	*:* Introduces a useful tool you can use to set up FM30 scanner and develop new applications.
Chapter 3 System Settings	*:* Introduces three configuration methods and describes how to configure general parameters of FM30 scanner.
Chapter 4 RS-232 Interface	*:* Describes how to configure RS-232 communication parameters.
Chapter 5 USB Interface	*:* Describes how to configure USB communication parameters.
Chapter 6 Symbologies	*:* Lists all compatible symbologies and describes how to configure the relevant parameters.
Chapter 7 Data Formatter	*:* Explains how to customize scanned data with the data formatter.
Chapter 8 Prefix & Suffix	*:* Describes how to use prefix and suffix to customize scanned data.
Chapter 9 Batch Programming	*:* Explains how to integrate a complex programming task into a single barcode.
Appendix	*:* Provides factory defaults table and a bunch of frequently used programming barcodes.

Explanation of Icons

This icon indicates something relevant to this manual.

This icon indicates this information requires extra attention from the reader.

This icon indicates handy tips that can help you use or configure the scanner with ease.

This icon indicates practical examples that can help you to acquaint yourself with operations.

Chapter 1 Getting Started

Introduction

The NLS-FM30 scanner, armed with the world-leading Newland patented UIMG®, a computerized image recognition system-on-chip, bring about a new era of 2D barcode scanner.

The FM30 supports all mainstream 1D and standard 2D barcode symbologies (e.g., PDF417, QR Code M1/M2/Micro, Data Matrix and Chinese Sensible Code) as well as GS1-DataBar™(RSS) (Limited/Stacked/Expanded versions). It can read barcodes on virtually any medium - paper, plastic card, mobile phones and LCD displays.

Designed for fixed mount integrations, this scanner is easy to fit into various equipment such as self-service cabinets, vending machines, ATMs, access control, retail POS and fast food self-ordering kiosks.

About This Guide

This guide provides programming instructions for FM30 scanner. Users can configure the scanner by scanning the programming barcodes included in this manual.

The scanner has been properly configured for most applications and can be put into use without further configuration. Users may check the “Factory Defaults Table” section in Appendix for reference. Throughout the manual, asterisks (**) indicate factory default values.

Unpacking

Open the package and take out the scanner and its accessories. Check to make sure everything on the packing list is present and intact. If any contents are damaged or missing, please keep the original package and contact your dealer immediately for after-sales service.

FM30 Scanner

FM3051-2X

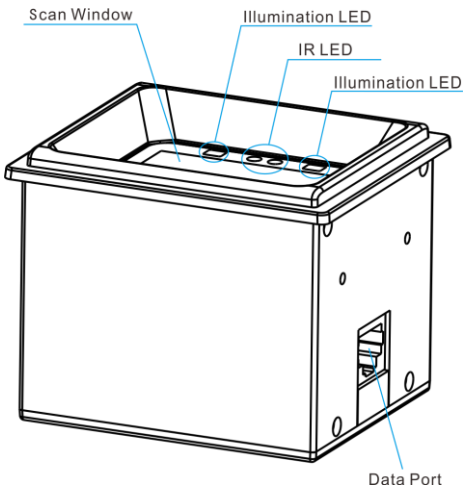

FM3056-2X

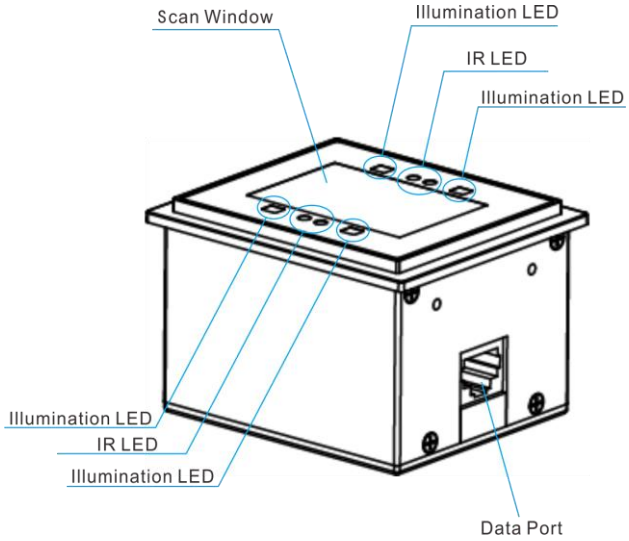

Data Port Pinout

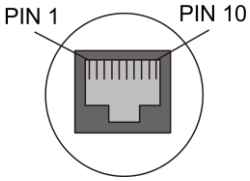

PIN	Signal	Type	Function
1	NC	-	NC
2	NC	-	NC
3	VCC	P	Power+ (DC5V)
4	TXD	O	RS-232 output
5	RXD	I	RS-232 input
6	CTS	I/O	Clear to send (RS-232)
7	RTS	I/O	Request to send (RS-232)
8	GND	P	Ground
9	D-	I/O	USB signal
10	D+	I/O	

Dimensions (unit: mm)

FM3056-2X Scanner

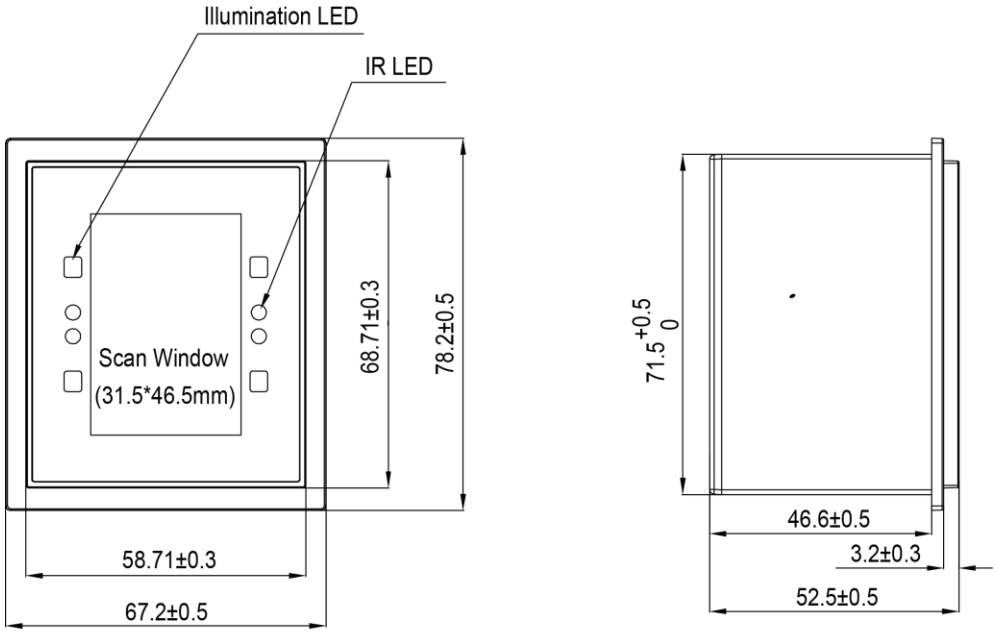

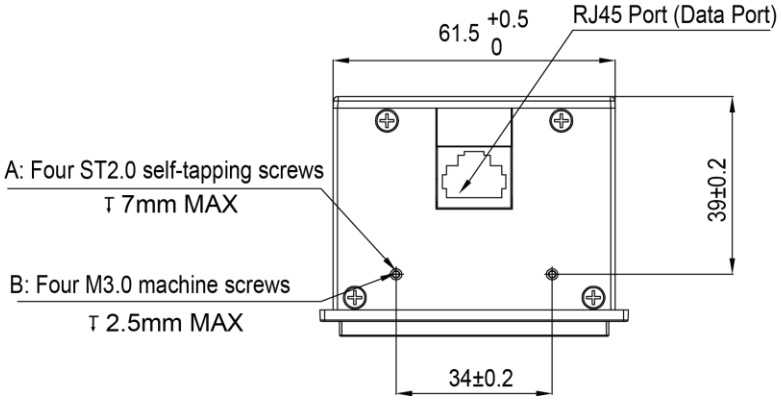

Note: Users may choose mounting solution A or B as per actual needs.

FM3051-2X Scanner

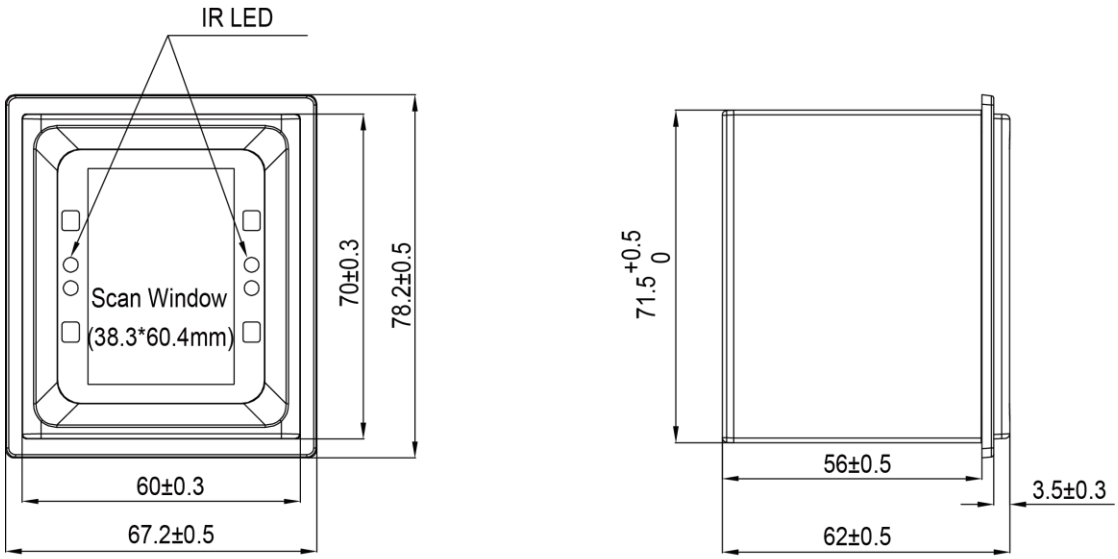

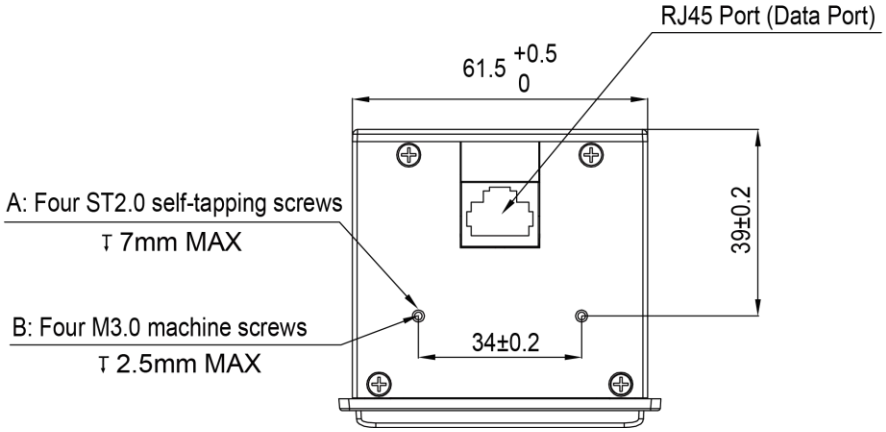

Note: Users may choose mounting solution A or B as per actual needs.

IR Triggering Range

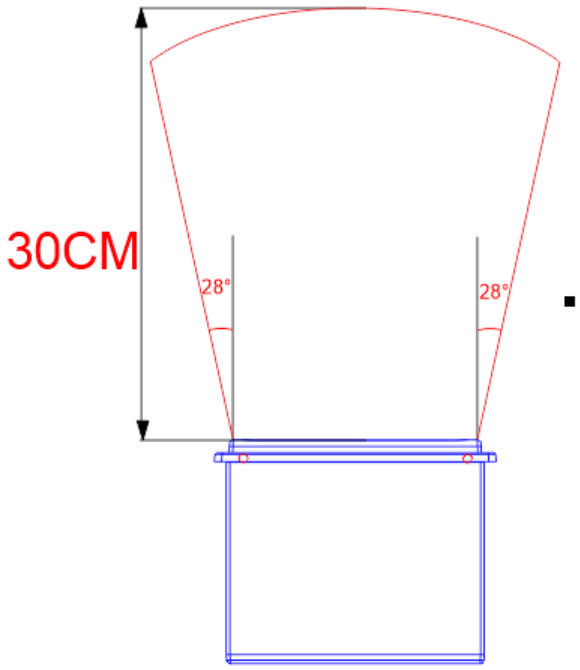

Note: If the IR LEDs on the scanner are blocked or covered, the Sense scan mode may not work properly.

Optics

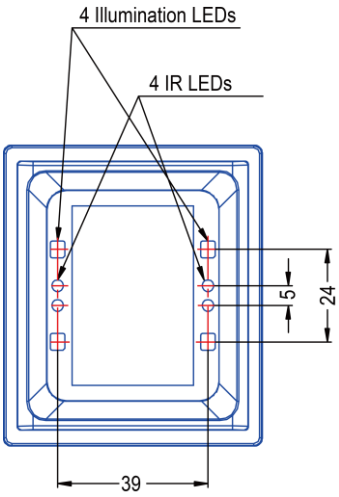

Horizontal:

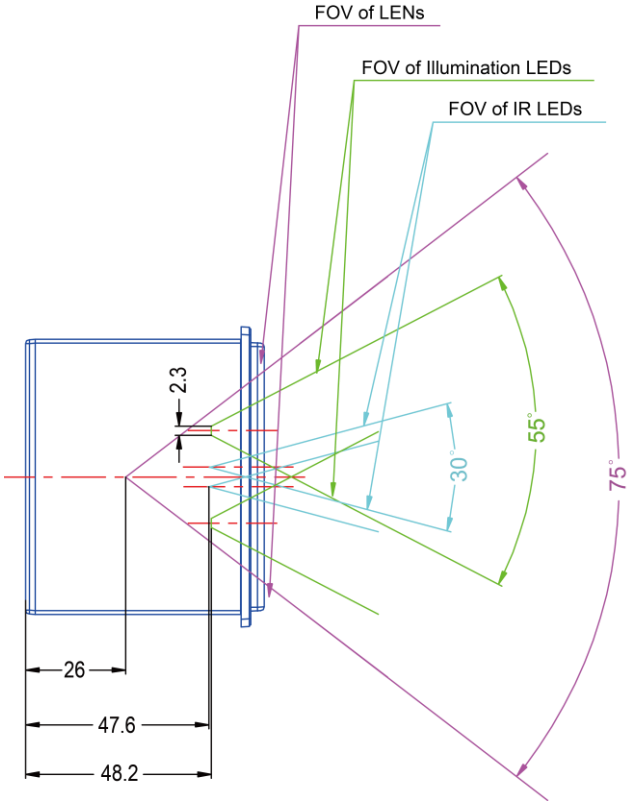

Vertical:

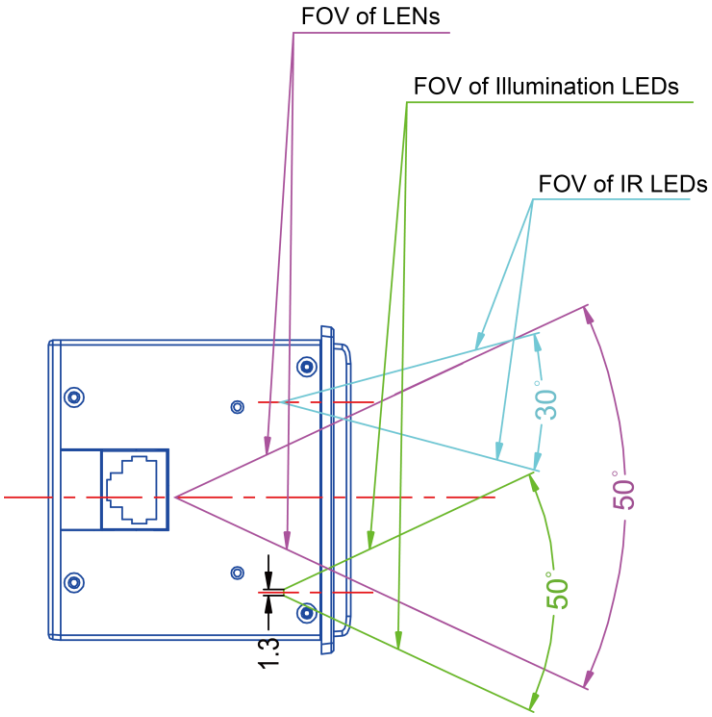

Connecting the FM30 to a Host Device

The scanner must be connected to a host device in actual application, such as PC, POS or any intelligent terminal with USB or RS-232 port, using a USB or RS-232 cable.

USB

USB port on the host device 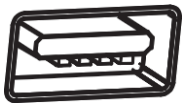

RS-232

RS-232 port on the host device

Note: Please check the port on the host device and purchase the cable accordingly.

Using USB Cable

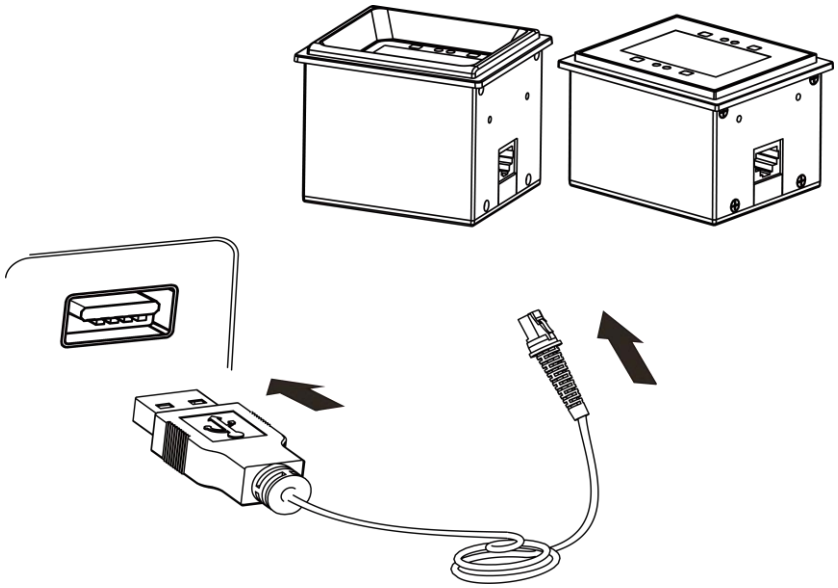

Connect the scanner to a host device with a USB cable with RJ45 and USB connectors:

1. Plug the cable's RJ45 connector into the data port on the scanner.
2. Plug the cable's USB connector into the USB port on the host device.

Using RS-232 Cable

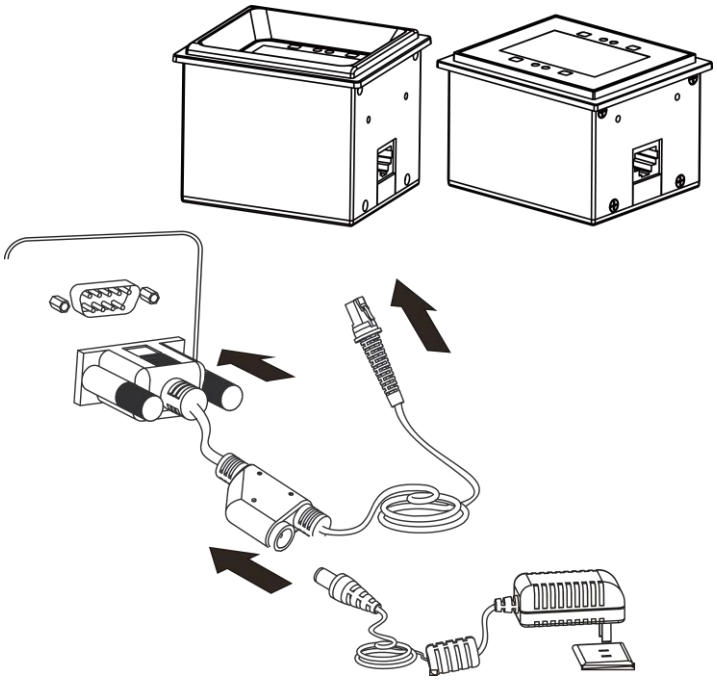

Connect the scanner to a host device with an RS-232 cable with RJ45, RS-232 connector and a power jack:

1. Plug the cable's RJ45 connector into the data port on the scanner.
2. Plug the cable's RS-232 connector into the RS-232 port on the host device.
3. Plug the power adapter into the power jack of the cable.
4. Connect the power adapter to a power outlet.

Maintenance

- ✧ The scan window should be kept clean.
- ✧ Do not scratch the scan window.
- ✧ Use soft brush to remove the stain from the scan window.
- ✧ Use the soft cloth to clean the window, such as eyeglass cleaning cloth.
- ✧ Do not spray any liquid on the scan window.
- ✧ Do not use any detergent to clean other parts of the device except for water.

Note: The warranty DOES NOT cover damages caused by inappropriate care and maintenance.

Scanning Instructions

1. Present the barcode in front of the scan window of the scanner, adjusting the distance between them within the range of 1cm-5cm.
2. For a successful read, the scanner will beep and send the data to the host.

Chapter 2 EasySet

EasySet, developed by Fujian Newland Auto-ID Tech. Co., Ltd., is a configuration tool for Newland's 1D/2D handheld barcode scanner, fixed mount barcode scanners and OEM scan engines. Its main features include:

- View device & configuration information of online device
- Configure device
- Update firmware of online device
- Load/modify existing XML configuration file; save current settings to an XML file
- Create/print/save programming barcodes to a PDF or Word file
- View/edit/save image stored on online device in the original image/BMP/JPG/TIFF format
- Send serial commands to online device and receive device response
- Supported languages: Chinese and English.

EasySet supports 32-bit/64-bit Microsoft WinXP/Win7/Win 8/Win 8.1/Win 10 operating systems.

EasySet can communicate with device via one of the following interface: RS-232, USB COM Port Emulation (UFCOM driver required), USB CDC (UFCOM driver required), USB DataPipe (UFCOM driver required), USB HID-POS.

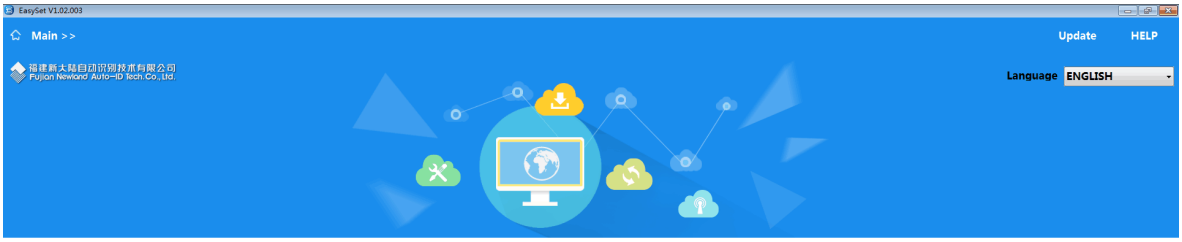

Chapter 3 System Settings

Introduction

There are three ways to configure the FM30: Barcode programming, command programming and Easyset programming.

Barcode Programming

The FM30 can be configured by scanning programming barcodes. All user programmable features/options are described along with their programming barcodes/commands in the following sections.

This programming method is most straightforward. However, it requires manually scanning barcodes. As a result, errors are more likely to occur.

Command Programming

The FM30 can also be configured by serial commands (HEX) sent from the host device.

Users can design an application program to send those command strings to the scanners to perform device configuration.

EasySet Programming

Besides the two methods mentioned above, you can conveniently perform scanner configuration through EasySet too. EasySet is a Windows-based configuration tool particularly designed for Newland products, enabling users to gain access to decoded data and captured images and to configure scanners. For more information about this tool, refer to the *EasySet User Guide*.

Programming Barcode/ Programming Command/Function

The figure above is an example that shows you the programming barcode and command for the Enter Setup function:

1. The **No Case Conversion** barcode.

2. The **No Case Conversion** command.

3. The description of feature/option.

4. ** indicates factory default settings.

Note: "@" included in the programming command indicates permanent setting which means the setting will not be lost by removing power from the scanner or turning off or rebooting it; whereas "#" included in the programming command indicates temporary setting which means the setting will be lost by removing power from the scanner or turning off or rebooting it.

Use of Programming Command

Besides the barcode programming method, the scanner can also be configured by serial commands (HEX) sent from the host device. **All commands must be entered in uppercase letters**.

Command Syntax

Prefix StorageType Tag SubTag {Data} [,SubTag {Data}] [;Tag SubTag {Data}] […] Suffix

Prefix: "~<SOH>0000" (HEX: **7E 01 30 30 30 30**), 6 characters.

StorageType: "@" (HEX: **40**) or "#" (HEX: **23**), 1 character. "@" means permanent setting which will not be lost by removing power from the scanner or rebooting it; "#" means temporary setting which will be lost by removing power from the scanner or rebooting it.

Tag: A 3-character case-sensitive field that identifies the desired command group. For example, all USB HID Keyboard configuration settings are identified with a Tag of KBW.

SubTag: A 3-character case-sensitive field that identifies the desired parameter within the tag group. For example, the SubTag for the keyboard layout is CTY.

Data: The value for a feature or parameter setting, identified by the Tag and SubTag.

Suffix: ";<ETX>" (HEX: **3B 03**), 2 characters.

Multiple commands can be issued within one Prefix/Suffix sequence. For configuration commands, only the **Tag**, **SubTag**, and **Data** fields must be repeated for each command in sequence. If an additional command is to be applied to the same Tag, then the command is separated with a comma (,) and only the **SubTag** and **Data** fields of the additional commands are issued. If the additional command requires a different **Tag** field, the command is separated from previous command by a semicolon (;).

Query Commands

For query commands, the entry in the **Data** field in the syntax above is one of the following characters means:

* (HEX: **2A**) What is the scanner's current value for the setting(s).

& (HEX: **26**) What is the factory default value for the setting(s).

^ (HEX: **5E**) What is the range of possible values for the setting(s).

The value of the **StoreType** field in a query command can be either "@" (HEX: **40**) or "**#**" (HEX: **23**).

A query command with the **SubTag** field omitted means to query all the settings concerning a tag. For example, to query all the current settings about Code 11, you should enter **7E 01 30 30 30 30 40 43 31 31 2A 3B 03** (i.e. ~<SOH>0000@C11*;<ETX>).

Responses

Different from command sequence, the prefix of a response consists of the six characters of "<STX><SOH>0000" (HEX: **02 01 30 30 30 30**).

The scanner responds to serial commands with one of the following three responses:

<ACK> (HEX: **06**) Indicates a good command which has been processed.

<NAK> (HEX: **15**) Indicates a good configuration command with its **Data** field entry out of the allowable range for this Tag and SubTag combination (e.g. an entry for an inter-keystroke delay of 100 when the field will only allow 2 digits), or an invalid query command.

<ENQ> (HEX: **05**) Indicates an invalid Tag or SubTag command.

When responding, the scanner echoes back the command sequence with the status character above inserted directly before each of the punctuation marks (the comma or semicolon) in the command.

Examples

Example 1: Enable Code 11, set the minimum and maximum lengths to 12 and 22 respectively.

Enter: **7E 01 30 30 30 30 40 43 31 31 45 4E 41 31 2C 4D 49 4E 31 32 2C 4D 41 58 32 32 3B 03**
(~<SOH>0000@C11ENA1,MIN12,MAX22;<ETX>)

Response: **02 01 30 30 30 30 40 43 31 31 45 4E 41 31 06 2C 4D 49 4E 31 32 06 2C 4D 41 58 32 32 06 3B 03**
(<STX><SOH>0000@C11ENA1<ACK>,MIN12<ACK>,MAX22<ACK>;<ETX>)

Example 2: Query the current minimum and maximum lengths of Code 11.

Enter: **7E 01 30 30 30 30 40 43 31 31 4D 49 4E 2A 2C 4D 41 58 2A 3B 03**
(~<SOH>0000@C11MIN*,MAX*;<ETX>)

Response: **02 01 30 30 30 30 40 43 31 31 4D 49 4E 31 32 06 2C 4D 41 58 32 32 06 3B 03**
(<STX><SOH>0000@C11MIN12<ACK>,MAX22<ACK>;<ETX>)

@SETUPE1

Enter Setup

Use of Programming Barcodes

Scanning the **Enter Setup** barcode can enable the scanner to enter the setup mode. Then you can scan a number of programming barcodes to configure your scanner. To exit the setup mode, scan the **Exit Setup** barcode or a non-programing barcode, or reboot the scanner.

@SETUPE0

**** Exit Setup**

@SETUPE1

Enter Setup

Programming barcode data (i.e. the characters under programming barcode) can be transmitted to the host device. Scan the appropriate barcode below to enable or disable the transmission of programming barcode data to the host device.

#SETUPT0

**** Do Not Transmit Programming Barcode Data**

#SETUPT1

Transmit Programming Barcode Data

@SETUPE0

**** Exit Setup**

@SETUPE1

Enter Setup

Illumination

A couple of illumination options are provided to improve the lighting conditions during every image capture:

Normal: Illumination LEDs are turned on during image capture.

Always On: Illumination LEDs keep ON after the scanner is powered on.

Off: Illumination LEDs are OFF all the time.

@ILLSCN1

**** Normal**

@ILLSCN0

Off

@ILLSCN2

Always On

Power On Beep

The scanner can be programmed to beep when it is powered on. Scan the **Off** barcode if you do not want a power on beep.

@PWBENA1

**** On**

@PWBENA0

Off

@SETUPE0

**** Exit Setup**

@SETUPE1

Enter Setup

Good Read Beep

Scanning the **Off** barcode can turn off the beep that indicates successful decode; scanning the **On** barcode can turn it back on.

@GRBENA1

**** On**

@GRBENA0

Off

@SETUPE0

**** Exit Setup**

@SETUPE1

Enter Setup

Good Read Beep Duration

This parameter sets the length of the beep the scanner emits on a good read.

@GRBDUR50

50ms

@GRBDUR100

**** 100ms**

@GRBDUR150

150ms

@GRBDUR200

200ms

@SETUPE0

**** Exit Setup**

@SETUPE1

Enter Setup

Good Read Beep Frequency

@GRBFRQ930

Extra Low (930Hz)

@GRBFRQ2700

**** Low (2700Hz)**

@GRBFRQ3940

Medium (3940Hz)

@GRBFRQ4800

High (4800Hz)

Good Read Beep Volume

@GRBVOL0

**** Loud**

@GRBVOL1

Medium

@GRBVOL2

Low

@SETUPE0

**** Exit Setup**

@SETUPE1

Enter Setup

Scan Mode

- **Sense Mode:** The scanner activates a decode session every time it detects a barcode presented to it. The decode session continues until a barcode is decoded or the decode session timeout expires. **Timeout between Decodes (Same Barcode)** can avoid undesired rereading of same barcode in a given period of time. **Sensitivity** can change the Sense Mode's sensibility to changes in images captured. **Image Stabilization Timeout** gives the scanner time to adapt to ambient environment after it decodes a barcode and "looks" for another.
- **Continuous Mode**: The scanner automatically starts one decode session after another. **Timeout between Decodes (Same Barcode)** can avoid undesired rereading of same barcode in a given period of time.

@SCNMOD2

Sense Mode

@SCNMOD3

Continuous Mode

Decode Session Timeout

This parameter sets the maximum time decode session continues during a scan attempt. It is programmable in 1ms increments from 100ms to 3,600,000ms. When it is set to 0, the timeout is infinite. The default setting is 3,000ms.

@ORTSET

Decode Session Timeout

Example

Set the decode session timeout to 1,500ms:

1. Scan the **Enter Setup** barcode.
2. Scan the **Decode Session Timeout** barcode.
3. Scan the numeric barcodes "1", "5", "0" and "0" from the "Digit Barcodes" section in Appendix.
4. Scan the **Save** barcode from the "Save/Cancel Barcodes" section in Appendix.
5. Scan the **Exit Setup** barcode.

@SETUPE0

**** Exit Setup**

@SETUPE1

Enter Setup

Image Stabilization Timeout (Sense Mode)

This parameter defines the amount of time the scanner will spend adapting to ambient environment after it decodes a barcode and “looks” for another.

@SENIST100

**** 100ms**

@SENIST200

200ms

@SENIST300

300ms

@SENIST400

400ms

@SENIST500

500ms

@SENIST600

600ms

@SENIST700

700ms

@SETUPE0

**** Exit Setup**

@SETUPE1

Enter Setup

@SENIST800

800ms

@SENIST900

900ms

@SENIST1000

1000ms

@SENIST1100

1100ms

@SENIST1200

1200ms

@SENIST1300

1300ms

@SENIST1400

1400ms

@SENIST1500

1500ms

@SENIST1600

1600ms

@SETUPE0

**** Exit Setup**

@SETUPE1

Enter Setup

Timeout between Decodes (Continuous Mode)

This parameter sets the timeout between decode sessions. When a decode session ends, next session will not happen until the timeout between decodes expires. It is programmable in 1ms increments from 0ms to 65,535ms. The default setting is 200ms.

@SCNINV

Timeout between Decodes

Example

Set the timeout between decodes to 1,500ms:

1. Scan the **Enter Setup** barcode.
2. Scan the **Timeout between Decodes** barcode.
3. Scan the numeric barcodes “1”, “5”, “0” and “0” from the “Digit Barcodes” section in Appendix.
4. Scan the **Save** barcode from the “Save/Cancel Barcodes” section in Appendix.
5. Scan the **Exit Setup** barcode.

@SETUPE0

**** Exit Setup**

@SETUPE1

Enter Setup

Timeout between Decodes (Same Barcode)

Timeout between Decodes (Same Barcode) can avoid undesired rereading of same barcode in a given period of time. This feature is only applicable to the Sense and Continuous modes.

To enable/disable the Timeout between Decodes (Same Barcode), scan the appropriate barcode below.

Enable Timeout between Decodes (Same Barcode): Do not allow the scanner to re-read same barcode before the timeout between decodes (same barcode) expires.

Disable Timeout between Decodes (Same Barcode): Allow the scanner to re-read same barcode.

@RRDENA1

Enable Timeout between Decodes (Same Barcode)

@RRDENA0

**** Disable Timeout between Decodes (Same Barcode)**

The following parameter sets the timeout between decodes for same barcode. It is programmable in 1ms increments from 1ms to 65,535ms. The default setting is 1,500ms.

@RRDDUR

Timeout between Decodes (Same Barcode)

Example

Set the timeout between decodes (same barcode) to 1,000ms:

1. Scan the **Enter Setup** barcode.
2. Scan the **Timeout between Decodes (Same Barcode)** barcode.
3. Scan the numeric barcodes “1”, “0”, “0” and “0” from the “Digit Barcodes” section in Appendix.
4. Scan the **Save** barcode from the “Save/Cancel Barcodes” section in Appendix.
5. Scan the **Exit Setup** barcode.

@SETUPE0

**** Exit Setup**

Sensitivity

Sensitivity specifies the degree of acuteness of the scanner's response to changes in images captured. There are 16 levels to choose from. The smaller the value, the higher the sensitivity and the lower requirement in image change to trigger the scanner. You can select an appropriate degree of sensitivity that fits the application environment. This feature is only applicable to the Sense mode.

@SENLVL14
Low Sensitivity

@SENLVL8
Medium Sensitivity

@SENLVL5
**** High Sensitivity**

@SENLVL2
Enhanced Sensitivity

@SENLVL
Custom Sensitivity (Level 1-16)

Example

Set the sensitivity to Level 10:

1. Scan the **Enter Setup** barcode.
2. Scan the **Custom Sensitivity** barcode.
3. Scan the numeric barcodes "1" and "0" from the "Digit Barcodes" section in Appendix.
4. Scan the **Save** barcode from the "Save/Cancel Barcodes" section in Appendix.
5. Scan the **Exit Setup** barcode.

@SETUPE1

Enter Setup

Scanning Preference

@EXPLVL3

**** Normal Motion Tolerance**

@EXPLVL4

High Motion Tolerance

Read Barcode On/Off

Sending the Read Barcode Off command **~<SOH>0000#SCNENA0;<ETX>** to the scanner can disable it from reading barcode, and the scanner is unable to scan barcode unless you send the Read Barcode On command **~<SOH>0000#SCNENA1;<ETX>** to it or power cycle it. By default, Read Barcode is On.

Decode Area

Whole Area Decoding: The scanner attempts to decode barcode(s) within its field of view, from the center to the periphery, and transmits the barcode that has been first decoded.

Specific Area Decoding: The scanner attempts to read barcode(s) within a specified decoding area and transmits the barcode that has been first decoded. This option allows the scanner to narrow its field of view to make sure it reads only those barcodes intended by the user. For instance, if multiple barcodes are placed closely together, specific area decoding in conjunction with appropriate pre-defined decoding area will insure that only the desired barcode is read.

@CADENA0

**** Whole Area Decoding**

@CADENA1

Specific Area Decoding

@SETUPE0

**** Exit Setup**

@SETUPE1

Enter Setup

If **Specific Area Decoding** is enabled, the scanner only reads barcodes that intersect the predefined decoding area.

The default decoding area is an area of 40% top, 60% bottom, 40% left and 60% right of the scanner's field of view

You can define the decoding area using the **Top of Decoding Area**, **Bottom of Decoding Area**, **Left of Decoding Area** and **Right of Decoding Area** barcodes as well as numeric barcode(s) that represent(s) a desired percentage (0-100). The value of Bottom must be greater than that of Top; the value of Right must be greater than that of Left.

@CADTOP

Top of Decoding Area

@CADBOT

Bottom of Decoding Area

@CADLEF

Left of Decoding Area

@CADRIG

Right of Decoding Area

@SETUPE0

**** Exit Setup**

Example

Program the scanner to only read Barcode 1 in the figure above by setting the decoding area to 10% top, 45% bottom, 15% left and 30% right:

1. Scan the **Enter Setup** barcode.
2. Scan the **Top of Decoding Area** barcode.
3. Scan the numeric barcode “0” from the “Digit Barcodes” section in Appendix.
4. Scan the **Save** barcode from the “Save/Cancel Barcodes” section in Appendix.
5. Scan the **Bottom of Decoding Area** barcode.
6. Scan the numeric barcodes “4” and “5” from the “Digit Barcodes” section in Appendix.
7. Scan the **Save** barcode from the “Save/Cancel Barcodes” section in Appendix.
8. Scan the **Top of Decoding Area** barcode.
9. Scan the numeric barcodes “1” and “0” from the “Digit Barcodes” section in Appendix.
10. Scan the **Save** barcode from the “Save/Cancel Barcodes” section in Appendix.
11. Scan the **Left of Decoding Area** barcode.
12. Scan the numeric barcode “0” from the “Digit Barcodes” section in Appendix.
13. Scan the **Save** barcode from the “Save/Cancel Barcodes” section in Appendix.
14. Scan the **Right of Decoding Area** barcode.
15. Scan the numeric barcodes “3” and “0” from the “Digit Barcodes” section in Appendix.
16. Scan the **Save** barcode from the “Save/Cancel Barcodes” section in Appendix.
17. Scan the **Left of Decoding Area** barcode.
18. Scan the numeric barcodes “1” and “5” from the “Digit Barcodes” section in Appendix.
19. Scan the **Save** barcode from the “Save/Cancel Barcodes” section in Appendix.
20. Scan the **Exit Setup** barcode.

@SETUPE1

Enter Setup

Image Flipping

@MIRROR0

**** Do Not Flip**

@MIRROR1

Flip Horizontally

@MIRROR2

Flip Vertically

@MIRROR3

Flip Horizontally & Vertically

Example of image not flipped

Example of image flipped horizontally

Example of image flipped vertically

Example of image flipped horizontally & vertically

@SETUPE0

**** Exit Setup**

Bad Read Message

Scan the appropriate barcode below to select whether or not to send a bad read message (user-programmable) when a good read does not occur before the decode session timeout expires.

@NGRENA0
**** Bad Read Message OFF**

@NGRENA1
Bad Read Message ON

Set Bad Read Message

A bad read message can contain up to 7 characters (HEX values from 0x00 to 0xFF). To set a bad read message, scan the **Set Bad Read Message** barcode, the numeric barcodes representing the hexadecimal values of desired character(s) and the **Save** barcode. The default setting is none.

@NGRSET
Set Bad Read Message

Example

Set the bad read message to "F" (HEX: 0x46):

1. Scan the **Enter Setup** barcode.
2. Scan the **Set Bad Read Message** barcode.
3. Scan the numeric barcodes "4" and "6" from the "Digit Barcodes" section in Appendix.
4. Scan the **Save** barcode from the "Save/Cancel Barcodes" section in Appendix.
5. Scan the **Exit Setup** barcode.

@SETUPE1

Enter Setup

Default Settings

Factory Defaults

Scanning the following barcode can restore the scanner to the factory defaults.

You may need to reset all parameters to the factory defaults when:

1. scanner is not properly configured so that it fails to decode barcodes.
2. you forget previous configuration and want to avoid its impact.

@FACDEF

Restore All Factory Defaults

Custom Defaults

Scanning the **Restore All Custom Defaults** barcode can reset all parameters to the custom defaults. Scanning the **Save as Custom Defaults** barcode can set the current settings as custom defaults.

Custom defaults are stored in the non-volatile memory.

@CUSSAV

Save as Custom Defaults

@CUSDEF

Restore All Custom Defaults

Restoring the scanner to the factory defaults will not remove the custom defaults from the scanner.

@SETUPE0

**** Exit Setup**

@SETUPE1

Enter Setup

Query Product Information

After scanning the barcode below, the product information (including product name, firmware version, decoder version, hardware version, product serial number, OEM serial number and manufacturing date) will be sent to the host device.

@QRYSYS

Query Product Information

Query Product Name

@QRYPDN

Query Product Name

Query Firmware Version

@QRYFWV

Query Firmware Version

@SETUPE0

**** Exit Setup**

@SETUPE1

Enter Setup

Query Decoder Version

@QRYDCV

Query Decoder Version

Query Hardware Version

@QRYHWV

Query Hardware Version

Query Product Serial Number

@QRYPSN

Query Product Serial Number

@SETUPE0

**** Exit Setup**

@SETUPE1

Enter Setup

Query Manufacturing Date

@QRYDAT

Query Manufacturing Date

Query OEM Serial Number

@QRYESN

Query OEM Serial Number

@SETUPE0

**** Exit Setup**

@SETUPE1

Enter Setup

Chapter 4 RS-232 Interface

Introduction

When the scanner is connected to the RS-232 port of a host device, you need to set communication parameters (including baud rate, parity check, data bit and stop bit) on the scanner to match the host device so that two devices can communicate with each other.

@INTERF0

RS-232

@SETUPE0

**** Exit Setup**

@SETUPE1

Enter Setup

Baud Rate

Baud rate is the number of bits of data transmitted per second. Set the baud rate to match the host requirements.

@232BAD8

**** 115200**

@232BAD7

57600

@232BAD6

38400

@232BAD5

19200

@232BAD4

14400

@232BAD3

9600

@232BAD2

4800

@232BAD1

2400

@SETUPE0

**** Exit Setup**

@SETUPE1

Enter Setup

Parity Check

Set the parity type to match the host requirements.

Odd Parity: If the data contains an odd number of 1 bits, the parity bit value is set to 0.

Even Parity: If the data contains an even number of 1 bits, the parity bit value is set to 0.

None: Select this option when no parity bit is required.

@232PAR0

**** None**

@232PAR1

Even Parity

@232PAR2

Odd Parity

@SETUPE0

**** Exit Setup**

@SETUPE1

Enter Setup

Data Bit

Set the number of data bits to match the host requirements.

@232DAT1

7 Data Bits

@232DAT0

**** 8 Data Bits**

Stop Bit

The stop bit(s) at the end of each transmitted character marks the end of transmission of one character and prepares the receiving device for the next character in the serial data stream. Set the number of stop bits to match the host requirements.

@232STP0

**** 1 Stop Bit**

@232STP1

2 Stop Bits

@SETUPE0

**** Exit Setup**

@SETUPE1

Enter Setup

Hardware Auto Flow Control

If CTS flow control is enabled, the scanner determines whether to transmit data based on CTS signal level. When CTS signal is at low level which means the serial port's cache memory of receiving device (such as PC) is full, the scanner stops sending data through serial port until CTS signal is set to high level by receiving device. If RTS flow control is enabled, whether the scanner receives data or not is dependent on RTS signal level. If the scanner is not ready for receiving, it will set RTS signal to low level. When sending device (such as PC) detects it, it will not send data to the scanner any more to prevent data loss.

If **No Flow Control** is selected, reception/transmission of serial data will not be influenced by RTS/CTS signal.

@232FLW0

** **No Flow Control**

@232FLW1

RTS Flow Control

@232FLW2

CTS Flow Control

@232FLW3

CTS/RTS Flow Control

Before enabling this feature, make sure that RTS/CTS signal lines are contained in RS-232 cable. Without the signal lines, RS-232 communication errors will occur.

@SETUPE0

**** Exit Setup**

Chapter 5 USB Interface

Introduction

There are four options for USB connection:

- ✧ USB HID Keyboard: The scanner's transmission is simulated as USB keyboard input with no need for command configuration or a driver. Barcode data could be entered by the virtual keyboard directly and it is also convenient for the host device to receive data.
- ✧ USB CDC: It is compliant with the standard USB CDC class specifications defined by the USB-IF and allows the host device to receive data in the way as a serial port does. A driver is needed when using this feature.
- ✧ HID POS (POS HID Barcode Scanner): It is based on the HID interface, with no need for a custom driver. It excels virtual keyboard and traditional RS-232 interface in transmission speed.
- ✧ IBM SurePOS: It conforms to IBM (now Toshiba Global Commerce Solutions) 4698 USB scanner interface specifications.

@SETUPE1

Enter Setup

USB HID Keyboard

When the scanner is connected to the USB port on a host device, you can enable the USB HID Keyboard feature by scanning the barcode below. Then scanner's transmission will be simulated as USB keyboard input. The Host receives keystrokes onthe virtual keyboard. It works on a Plug and Play basis and no driver is required.

@INTERF3

**** USB HID Keyboard**

If the host device allows keyboard input, then no extra software is needed for HID Keyboard input.

@SETUPE0

**** Exit Setup**

@SETUPE1

Enter Setup

USB Country Keyboard Types

Keyboard layouts vary from country to country. The default setting is U.S. keyboard.

@KBWCTY0

**** U.S. (English)**

@KBWCTY1

Belgium

@KBWCTY2

Brazil

@KBWCTY3

Canada (French)

@KBWCTY4

Czechoslovakia

@KBWCTY5

Denmark

@KBWCTY6

Finland (Swedish)

@SETUPE0

**** Exit Setup**

@SETUPE1

Enter Setup

@KBWCTY7

France

@KBWCTY8

Germany/ Austria

@KBWCTY9

Greece

@KBWCTY10

Hungary

@KBWCTY11

Israel (Hebrew)

@KBWCTY12

Italy

@KBWCTY13

Latin America/ South America

@KBWCTY14

Netherlands (Dutch)

@SETUPE0

**** Exit Setup**

@SETUPE1

Enter Setup

@KBWCTY15

Norway

@KBWCTY16

Poland

@KBWCTY17

Portugal

@KBWCTY18

Romania

@KBWCTY19

Russia

@KBWCTY21

Slovakia

@KBWCTY22

Spain

@KBWCTY23

Sweden

@SETUPE0

**** Exit Setup**

@SETUPE1

Enter Setup

@KBWCTY24

Switzerland (German)

@KBWCTY25

Turkey_F

@KBWCTY26

Turkey_Q

@KBWCTY27

UK

@KBWCTY28

Japan

@SETUPE0

**** Exit Setup**

@SETUPE1

Enter Setup

Beep on Unknown Character

Due to the differences in keyboard layouts, some characters contained in barcode data may be unavailable on the selected keyboard. As a result, the scanner fails to transmit the unknown characters.

Scan the appropriate barcode below to enable or disable the emission of beep when an unknown character is detected.

@KBWBUC0

**** Do Not Beep on Unknown Character**

@KBWBUC1

Beep on Unknown Character

Supposing French keyboard (Country Code: 7) is selected and barcode data ”AÐF” is being dealted with, the keyboard will fail to locate the “Ð” (0xD0) character and the scanner will ignore the character and continue to process the next one.

Do Not Beep on Unknown Character: The scanner does not beep and the Host receives “AF”.

Beep on Unknown Character: The scanner beeps and the Host still receives “AF”.

If **Emulate ALT+Keypad ON** is selected, **Beep on Unknown Character** does not function.

@SETUPE0

**** Exit Setup**

@SETUPE1

Enter Setup

Emulate ALT+Keypad

When **Emulate ALT+Keypad** is turned on, any character whose ASCII value is greater than or equal to 0x20 is sent over the numeric keypad no matter which keyboard type is selected.

1. ALT Make
2. Enter the number corresponding to a desired character on the keypad.
3. ALT Break

After **Emulate ALT+Keypad ON** is selected, you need to choose the code page with which the barcodes were created.

@KBWALT0

**** Emulate ALT+Keypad OFF**

@KBWALT1

Emulate ALT+Keypad ON

Since sending a character involves multiple keystroke emulations, this method appears less efficient.

Supposing **Emulate ALT+Keypad** is ON, **Code Page 1252 (West European Latin)** is selected and **Emulate Keypad with Leading Zero** is turned off, barcode data ”AÐF” (65/208/70) is sent as below:

“A” – “ALT Make” + “065” + “ALT Break”

“Ð” -- “ALT Make” + “208” + “ALT Break”

“F” -- “ALT Make” + “070” + “ALT Break”

@SETUPE0

**** Exit Setup**

@SETUPE1

Enter Setup

Emulate Keypad with Leading Zero

You may turn this feature on to send character sequences sent over the numeric keypad as ISO characters which have a leading zero. For example, ASCII A transmits as “ALT MAKE” 0065 “ALT BREAK”. This feature is only effective when **Emulate ALT+Keypad** is enabled.

@KBWALZ1

**** On**

@KBWALZ0

Off

Code Page

Code pages define the mapping of character codes to characters. If the data received does not display with the proper characters, it may be because the barcode being scanned was created using a code page that is different from the one the host program is expecting. If this is the case, select the code page with which the barcodes were created by scanning the appropriate barcode below. For PDF417, QR Code and Data Matrix, besides setting the code page, you also need to set the character encoding in the “Character Encoding” section in Chapter 6. This feature is only effective when **Emulate ALT+Keypad** is turned on.

@KBWCPG0

**** Code Page 1252 (West European Latin)**

@KBWCPG1

Code Page 1251 (Cyrillic)

@SETUPE0

**** Exit Setup**

Function Key Mapping

When **Ctrl+ASCII Mode** is selected, function characters (0x00 - 0x1F) are sent as ASCII sequences.

@KBWFKM0
**** Disable**

@KBWFKM1
Ctrl+ASCII Mode

@KBWFKM2
Alt+Keypad Mode

Example

If **Ctrl+ASCII Mode** is selected and other parameters of USB HID Keyboard adopt factory defaults, barcode data “A<HT>(i.e. Horizontal Tab)F” (0x41/0x09/0x46) is sent as below:

“A” - Keystroke “A”.

<HT> - “Ctrl Make” + Keystroke “I” + “Ctrl Break”

“F” - Keystroke “F”

For some text editors, “Ctrl I” means italic convert. So the output may be “A*F*”.

If **Alt+Keypad Mode** is selected and other parameters of USB HID Keyboard adopt factory defaults, the data above is sent as below:

“A” - Keystroke “A”.

<HT> - “Alt Make” + Keystrokes “009” + “Alt Break”

“F” - Keystroke “F”

ASCII Function Key Mapping Table

ASCII Function	ASCII Value (HEX)	Function Key Mapping Disabled	Ctrl+ASCII
NUL	00	Null	Ctrl+@
SOH	01	Keypad Enter	Ctrl+A
STX	02	Caps Lock	Ctrl+B
ETX	03	ALT	Ctrl+C
EOT	04	Null	Ctrl+D
ENQ	05	CTRL	Ctrl+E
ACK	06	Null	Ctrl+F
BEL	07	Enter	Ctrl+G
BS	08	Left Arrow	Ctrl+H
HT	09	Horizontal Tab	Ctrl+I
LF	0A	Down Arrow	Ctrl+J
VT	0B	Vertical Tab	Ctrl+K
FF	0C	Delete	Ctrl+L
CR	0D	Enter	Ctrl+M
SO	0E	Insert	Ctrl+N
SI	0F	Esc	Ctrl+O
DLE	10	F11	Ctrl+P
DC1	11	Home	Ctrl+Q
DC2	12	PrintScreen	Ctrl+R
DC3	13	Backspace	Ctrl+S
DC4	14	tab+shift	Ctrl+T
NAK	15	F12	Ctrl+U
SYN	16	F1	Ctrl+V
ETB	17	F2	Ctrl+W
CAN	18	F3	Ctrl+X
EM	19	F4	Ctrl+Y
SUB	1A	F5	Ctrl+Z
ESC	11	F6	Ctrl+[
FS	1C	F7	Ctrl+\
GS	1D	F8	Ctrl+]
RS	1E	F9	Ctrl+6
US	1F	F10	Ctrl+-

ASCII Function Key Mapping Table (Continued)

The last five characters (0x1B~0x1F) in the table above apply to US keyboard layout only. The following chart provides the equivalents of these five characters for other countries.

Country	Ctrl+ASCII					
United States	Ctrl+[	Ctrl+\	Ctrl+]	Ctrl+6	Ctrl+-	
Belgium	Ctrl+[	Ctrl+<	Ctrl+]	Ctrl+6	Ctrl+-	
Scandinavia	Ctrl+8	Ctrl+<	Ctrl+9	Ctrl+6	Ctrl+-	
France	Ctrl+^	Ctrl+8	Ctrl+$	Ctrl+6	Ctrl+=	
Germany		Ctrl+Ã	Ctrl++	Ctrl+6	Ctrl+-	
Italy		Ctrl+\	Ctrl++	Ctrl+6	Ctrl+-	
Switzerland		Ctrl+<	Ctrl+..	Ctrl+6	Ctrl+-	
United Kingdom	Ctrl+[	Ctrl+¢	Ctrl+]	Ctrl+6	Ctrl+-	
Denmark	Ctrl+8	Ctrl+\	Ctrl+9	Ctrl+6	Ctrl+-	
Norway	Ctrl+8	Ctrl+\	Ctrl+9	Ctrl+6	Ctrl+-	
Spain	Ctrl+[	Ctrl+\	Ctrl+]	Ctrl+6	Ctrl+-	

@SETUPE1

Enter Setup

Inter-Keystroke Delay

This parameter specifies the delay between emulated keystrokes.

@KBWDLY0

0ms

@KBWDLY5

5ms

@KBWDLY10

**** 10ms**

@KBWDLY15

15ms

@KBWDLY20

20ms

@KBWDLY25

25ms

@KBWDLY30

30ms

@SETUPE0

**** Exit Setup**

@SETUPE1

Enter Setup

@KBWDLY35

35ms

@KBWDLY40

40ms

@KBWDLY45

45ms

@KBWDLY50

50ms

@KBWDLY55

55ms

@KBWDLY60

60ms

@KBWDLY65

65ms

@KBWDLY70

70ms

@KBWDLY75

75ms

@SETUPE0

**** Exit Setup**

@SETUPE1

Enter Setup

Convert Case

Scan the appropriate barcode below to convert all bar code data to your desired case.

@KBWCAS0

**** No Case Conversion**

@KBWCAS1

Convert All to Upper Case

@KBWCAS2

Convert All to Lower Case

When the **Convert All to Lower Case** feature is enabled, barcode data “AbC” is transmitted as “abc”.

If **Emulate ALT+Keypad ON** is selected, **Convert All to Lower Case** and **Convert All to Upper Case** do not function.

@SETUPE0

**** Exit Setup**

@SETUPE1

Enter Setup

Emulate Numeric Keypad

Do Not Emulate Numeric Keypad: Sending a number (0-9) is emulated as keystroke(s) on main keyboard.

Emulate Numeric Keypad: Sending a number (0-9) is emulated as keystroke(s) on numeric keypad.

@KBWNUM0

**** Do Not Emulate Numeric Keypad**

@KBWNUM1

Emulate Numeric Keypad

Emulate ALT+Keypad ON prevails over **Emulate Numeric Keypad**.

@SETUPE0

**** Exit Setup**

@SETUPE1

Enter Setup

Polling Rate

This parameter specifies the polling rate for a USB keyboard. If the Host drops characters, change the polling rate to a bigger value.

@KBWPOR0

**** 1ms**

@KBWPOR1

2ms

@KBWPOR2

3ms

@KBWPOR3

4ms

@KBWPOR4

5ms

@KBWPOR5

6ms

@KBWPOR6

7ms

@SETUPE0

**** Exit Setup**

@SETUPE1

Enter Setup

@KBWPOR7

8ms

@KBWPOR8

9ms

@KBWPOR9

10ms

Caps Lock

When sending barcode data with USB HID keyboard to a host device whose Caps Lock key is on:

Caps Lock OFF: the scanner turns off the host device's Caps Lock key before sending the data and turns it back on after data transmission is done. Select this option when you are using a non-Japanese keyboard.

Caps Lock ON: the scanner sends the data to the host device directly, ignoring the latter's Caps Lock status. Select this option when you are using a Japanese keyboard.

@KBWCAP0

**** Caps Lock OFF**

@KBWCAP2

Caps Lock ON

@SETUPE0

**** Exit Setup**

@SETUPE1

Enter Setup

USB CDC

If your scanner is connected to the USB port on a host device, the USB CDC feature allows the host device to receive data in the way as a serial port does. A driver is needed when using this feature. You may download it from our website at www.newlandaidc.com.

@INTERF8

USB CDC

@SETUPE0

**** Exit Setup**

HID POS (POS HID Barcode Scanner)

Introduction

The HID-POS interface is recommended for new application programs. It can send up to 56 characters in a single USB report and appears more efficient than keyboard emulation.

Features:

1. HID based, no custom driver required.
2. Way more efficient in communication than keyboard emulation and traditional RS-232 interface.

@INTERF5
USB HID-POS

Access the Scanner with Your Program

Use CreateFile to access the scanner as a HID device and then use ReadFile to deliver the scanned data to the application program. Use WriteFile to send data to the scanner.

For detailed information about USB and HID interfaces, go to www.USB.org.

Acquire Scanned Data

After a barcode is decoded, the scanner sends an input report as below:

	Bit							
Byte	7	6	5	4	3	2	1	0
0	Report ID = 0x02							
1	Barcode Length							
2-57	Decoded Data (1-56)							
58-61	Reserved							
62	Newland Symbology Identifier or N/C: 0x00							
63	-	-	-	-	-	-	-	Decoded data continued

Send Command to the Scanner

This output report is used to send commands to the scanner. All programming commands can be used.

	Bit							
Byte	7	6	5	4	3	2	1	0
0	Report ID = 0x04							
1	Length of command							
2-63	Command (1-62)							

IBM SurePOS (Tabletop)

@INTERF6
IBM SurePOS (Tabletop)

IBM SurePOS (Handheld)

@INTERF7
IBM SurePOS (Handheld)

VID/PID

USB uses VID (Vendor ID) and PID (Product ID) to identify and locate a device. The VID is assigned by USB Implementers Forum. Newland's vendor ID is 1EAB (Hex). A range of PIDs are used for each Newland product family. Every PID contains a base number and interface type (keyboard, HID POS, etc.).

Product	Interface	PID (Hex)	PID (Dec)
FM30	USB HID Keyboard	1A03	6659
	USB CDC	1A06	6662
	HID POS	1A10	6672
	IBM SurePOS (Tabletop)	1A20	6688
	IBM SurePOS(Handheld)	1A21	6689

@SETUPE1

Enter Setup

Chapter 6 Symbologies

Introduction

Every symbology (barcode type) has its own unique attributes. This chapter provides programming barcodes for configuring the scanner so that it can identify various symbologies. It is recommended to disable those that are rarely used to increase the efficiency of the scanner.

Global Settings

Enable/Disable All Symbologies

If the **Disable All Symbologies** feature is enabled, the scanner will not be able to read any non-programming barcodes except the programming barcodes.

@ALLENA1

Enable All Symbologies

@ALLENA0

Disable All Symbologies

Enable/Disable 1D Symbologies

@ALL1DC1

Enable 1D Symbologies

@ALL1DC0

Disable 1D Symbologies

@SETUPE0

**** Exit Setup**

@SETUPE1

Enter Setup

Enable/Disable 2D Symbologies

@ALL2DC1

Enable 2D Symbologies

@ALL2DC0

Disable 2D Symbologies

@SETUPE0

**** Exit Setup**

@SETUPE1

Enter Setup

Video Reverse

Regular barcode: Dark image on a bright background.

Inverse barcode: Bright image on a dark background.

The examples of regular barcode and inverse barcode are shown below.

Regular Barcode

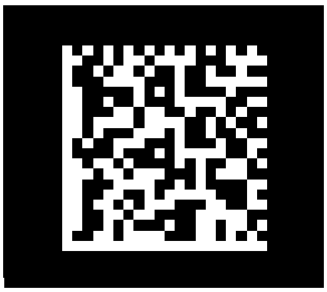

Inverse Barcode

Video Reverse allows the scanner to read barcodes that are inverted.

Video Reverse ON: Read both regular barcodes and inverse barcodes.

Video Reverse OFF: Read regular barcodes only.

The scanner shows a slight decrease in scanning speed when Video Reverse is ON.

@ALLINV0

**** Video Reverse OFF**

@ALLINV1

Video Reverse ON

@SETUPE0

**** Exit Setup**

@SETUPE1

Enter Setup

Code 128

Restore Factory Defaults

@128DEF

Restore the Factory Defaults of Code 128

Enable/Disable Code 128

@128ENA1

**** Enable Code 128**

@128ENA0

Disable Code 128

If the scanner fails to identify Code 128 barcodes, you may first try this solution by scanning the **Enter Setup** barcode and then **Enable Code 128** barcode.

@SETUPE0

**** Exit Setup**

@SETUPE1

Enter Setup

Set Length Range for Code 128

The scanner can be configured to only decode Code 128 barcodes with lengths that fall between (inclusive) the minimum and maximum lengths. To accomplish it, you need to set the minimum and maximum lengths.

@128MIN

Set the Minimum Length (Default: 1)

@128MAX

Set the Maximum Length (Default: 127)

If minimum length is set to be greater than maximum length, the scanner only decodes Code 128 barcodes with either the minimum or maximum length. If minimum length is same as maximum length, only Code 128 barcodes with that length are to be decoded.

Set the scanner to decode Code 128 barcodes containing between 8 and12 characters:

1. Scan the **Enter Setup** barcode.
2. Scan the **Set the Minimum Length** barcode.
3. Scan the numeric barcode “8” from the “Digit Barcodes” section in Appendix.
4. Scan the **Save** barcode from the “Save/Cancel Barcodes” section in Appendix.
5. Scan the **Set the Maximum Length** barcode.
6. Scan the numeric barcodes “1” and “2” from the “Digit Barcodes” section in Appendix.
7. Scan the **Save** barcode from the “Save/Cancel Barcodes” section in Appendix.
8. Scan the **Exit Setup** barcode.

@SETUPE0

**** Exit Setup**

@SETUPE1

Enter Setup

Transmit Check Character

@128CHK2

Transmit Code 128 Check Character

@128CHK1

**** Do Not Transmit Code 128 Check Character**

@SETUPE0

**** Exit Setup**

@SETUPE1

Enter Setup

EAN-8

Restore Factory Defaults

@EA8DEF

Restore the Factory Defaults of EAN-8

Enable/Disable EAN-8

@EA8ENA1

**** Enable EAN-8**

@EA8ENA0

Disable EAN-8

If the scanner fails to identify EAN-8 barcodes, you may first try this solution by scanning the **Enter Setup** barcode and then **Enable EAN-8** barcode.

Transmit Check Character

EAN-8 is 8 digits in length with the last one as its check character used to verify the integrity of the data.

@EA8CHK2

**** Transmit EAN-8 Check Character**

@EA8CHK1

Do Not Transmit EAN-8 Check Character

@SETUPE0

**** Exit Setup**

@SETUPE1

Enter Setup

2-Digit Add-On Code

An EAN-8 barcode can be augmented with a two-digit add-on code to form a new one. In the example below, the part surrounded by blue dotted line is an EAN-8 barcode while the part circled by red dotted line is a two-digit add-on code.

@EA8AD20

**** Disable 2-Digit Add-On Code**

@EA8AD21

Enable 2-Digit Add-On Code

Disable 2-Digit Add-On Code: The scanner decodes EAN-8 and ignores the add-on code when presented with an EAN-8 plus 2-digit add-on barcode. It can also decode EAN-8 barcodes without 2-digit add-on codes.

Enable 2-Digit Add-On Code: The scanner decodes a mix of EAN-8 barcodes with and without 2-digit add-on codes.

@SETUPE0

**** Exit Setup**

@SETUPE1

Enter Setup

5-Digit Add-On Code

An EAN-8 barcode can be augmented with a five-digit add-on code to form a new one. In the example below, the part surrounded by blue dotted line is an EAN-8 barcode while the part circled by red dotted line is a five-digit add-on code.

@EA8AD50

**** Disable 5-Digit Add-On Code**

@EA8AD51

Enable 5-Digit Add-On Code

Disable 5-Digit Add-On Code: The scanner decodes EAN-8 and ignores the add-on code when presented with an EAN-8 plus 5-digit add-on barcode. It can also decode EAN-8 barcodes without 5-digit add-on codes.

Enable 5-Digit Add-On Code: The scanner decodes a mix of EAN-8 barcodes with and without 5-digit add-on codes.

@SETUPE0

**** Exit Setup**

@SETUPE1

Enter Setup

Add-On Code Required

When **EAN-8 Add-On Code Required** is selected, the scanner will only read EAN-8 barcodes that contain add-on codes.

@EA8REQ0

**** EAN-8 Add-On Code Not Required**

@EA8REQ1

EAN-8 Add-On Code Required

Convert EAN-8 to EAN-13

Convert EAN-8 to EAN-13: Convert EAN-8 decoded data to EAN-13 format before transmission. After conversion, the data follows EAN-13 format and is affected by EAN-13 programming selections (e.g., Check Character).

Do Not Convert EAN-8 to EAN-13: EAN-8 decoded data is transmitted as EAN-8 data, without conversion.

@EA8EXP0

**** Do Not Convert EAN-8 to EAN-13**

@EA8EXP1

Convert EAN-8 to EAN-13

@SETUPE0

**** Exit Setup**

@SETUPE1

Enter Setup

EAN-13

Restore Factory Defaults

@E13DEF

Restore the Factory Defaults of EAN-13

Enable/Disable EAN-13

@E13ENA1

**** Enable EAN-13**

@E13ENA0

Disable EAN-13

If the scanner fails to identify EAN-13 barcodes, you may first try this solution by scanning the **Enter Setup** barcode and then **Enable EAN-13** barcode.

@SETUPE0

**** Exit Setup**

@SETUPE1

Enter Setup

Transmit Check Character

@E13CHK2

**** Transmit EAN-13 Check Character**

@E13CHK1

Do Not Transmit EAN-13 Check Character

2-Digit Add-On Code

An EAN-13 barcode can be augmented with a two-digit add-on code to form a new one. In the example below, the part surrounded by blue dotted line is an EAN-13 barcode while the part circled by red dotted line is a two-digit add-on code.

@E13AD20

**** Disable 2-Digit Add-On Code**

@E13AD21

Enable 2-Digit Add-On Code

Disable 2-Digit Add-On Code: The scanner decodes EAN-13 and ignores the add-on code when presented with an EAN-13 plus 2-digit add-on barcode. It can also decode EAN-13 barcodes without 2-digit add-on codes.

Enable 2-Digit Add-On Code: The scanner decodes a mix of EAN-13 barcodes with and without 2-digit add-on codes.

@SETUPE0

**** Exit Setup**

@SETUPE1

Enter Setup

5-Digit Add-On Code

An EAN-13 barcode can be augmented with a five-digit add-on code to form a new one. In the example below, the part surrounded by blue dotted line is an EAN-13 barcode while the part circled by red dotted line is a five-digit add-on code.

@E13AD50

**** Disable 5-Digit Add-On Code**

@E13AD51

Enable 5-Digit Add-On Code

Disable 5-Digit Add-On Code: The scanner decodes EAN-13 and ignores the add-on code when presented with an EAN-13 plus 5-digit add-on barcode. It can also decode EAN-13 barcodes without 5-digit add-on codes.

Enable 5-Digit Add-On Code: The scanner decodes a mix of EAN-13 barcodes with and without 5-digit add-on codes.

Add-On Code Required

When **EAN-13 Add-On Code Required** is selected, the scanner will only read EAN-13 barcodes that contain add-on codes.

@E13REQ0

**** EAN-13 Add-On Code Not Required**

@E13REQ1

EAN-13 Add-On Code Required

@SETUPE0

**** Exit Setup**

@SETUPE1

Enter Setup

EAN-13 Beginning with 290 Add-On Code Required

This setting programs the scanner to require an add-on code (2-digit or 5-digit) on EAN-13 barcodes that begin with “290”. The following settings can be programmed:

Require Add-On Code: All EAN-13 barcodes that begin with “290” must have a 2-digit or 5-digit add-on code. The EAN-13 barcode with the add-on code is then transmitted. If the required add-on code is not found, the EAN-13 barcode is discarded.

Do Not Require Add-On Code: If you have selected **Require Add-On Code**, and you want to disable this feature, scan **Do Not Require Add-On Code**. EAN-13 barcodes are handled, depending on your selection for the “Add-On Code Required” feature.

@E132900

**** Do Not Require Add-On Code**

@E132901

Require Add-On Code

EAN-13 Beginning with 378/379 Add-On Code Required

This setting programs the scanner to require an add-on code (2-digit or 5-digit) on EAN-13 barcodes that begin with a “378” or “379”. The following settings can be programmed:

Require Add-On Code: All EAN-13 barcodes that begin with a “378” or “379” must have a 2-digit or 5-digit add-on code. The EAN-13 barcode with the add-on code is then transmitted. If the required add-on code is not found, the EAN-13 barcode is discarded.

Do Not Require Add-On Code: If you have selected **Require Add-On Code**, and you want to disable this feature, scan **Do Not Require Add-On Code**. EAN-13 barcodes are handled, depending on your selection for the “Add-On Code Required” feature.

@E133780

**** Do Not Require Add-On Code**

@E133781

Require Add-On Code

@SETUPE0

**** Exit Setup**

@SETUPE1

Enter Setup

EAN-13 Beginning with 414/419 Add-On Code Required

This setting programs the scanner to require an add-on code (2-digit or 5-digit) on EAN-13 barcodes that begin with a “414” or “419”. The following settings can be programmed:

Require Add-On Code: All EAN-13 barcodes that begin with a “414” or “419” must have a 2-digit or 5-digit add-on code. The EAN-13 barcode with the add-on code is then transmitted. If the required add-on code is not found, the EAN-13 barcode is discarded.

Do Not Require Add-On Code: If you have selected **Require Add-On Code**, and you want to disable this feature, scan **Do Not Require Add-On Code**. EAN-13 barcodes are handled, depending on your selection for the “Add-On Code Required” feature.

@E134140

**** Do Not Require Add-On Code**

@E134141

Require Add-On Code

EAN-13 Beginning with 434/439 Add-On Code Required

This setting programs the scanner to require an add-on code (2-digit or 5-digit) on EAN-13 barcodes that begin with a “434” or “439”. The following settings can be programmed:

Require Add-On Code: All EAN-13 barcodes that begin with a “434” or “439” must have a 2-digit or 5-digit add-on code. The EAN-13 barcode with the add-on code is then transmitted. If the required add-on code is not found, the EAN-13 barcode is discarded.

Do Not Require Add-On Code: If you have selected **Require Add-On Code**, and you want to disable this feature, scan **Do Not Require Add-On Code**. EAN-13 barcodes are handled, depending on your selection for the “Add-On Code Required” feature.

@E134340

**** Do Not Require Add-On Code**

@E134341

Require Add-On Code

@SETUPE0

**** Exit Setup**

@SETUPE1

Enter Setup

EAN-13 Beginning with 977 Add-On Code Required

This setting programs the scanner to require an add-on code (2-digit or 5-digit) on EAN-13 barcodes that begin with “977”. The following settings can be programmed:

Require Add-On Code: All EAN-13 barcodes that begin with “977” must have a 2-digit or 5-digit add-on code. The EAN-13 barcode with the add-on code is then transmitted. If the required add-on code is not found, the EAN-13 barcode is discarded.

Do Not Require Add-On Code: If you have selected **Require Add-On Code**, and you want to disable this feature, scan **Do Not Require Add-On Code**. EAN-13 barcodes are handled, depending on your selection for the “Add-On Code Required” feature.

@E139770

**** Do Not Require Add-On Code**

@E139771

Require Add-On Code

EAN-13 Beginning with 978 Add-On Code Required

This setting programs the scanner to require an add-on code (2-digit or 5-digit) on EAN-13 barcodes that begin with “978”. The following settings can be programmed:

Require Add-On Code: All EAN-13 barcodes that begin with “978” must have a 2-digit or 5-digit add-on code. The EAN-13 barcode with the add-on code is then transmitted. If the required add-on code is not found, the EAN-13 barcode is discarded.

Do Not Require Add-On Code: If you have selected **Require Add-On Code**, and you want to disable this feature, scan **Do Not Require Add-On Code**. EAN-13 barcodes are handled, depending on your selection for the “Add-On Code Required” feature.

@E139780

**** Do Not Require Add-On Code**

@E139781

Require Add-On Code

@SETUPE0

**** Exit Setup**

EAN-13 Beginning with 979 Add-On Code Required

This setting programs the scanner to require an add-on code (2-digit or 5-digit) on EAN-13 barcodes that begin with “979”. The following settings can be programmed:

Require Add-On Code: All EAN-13 barcodes that begin with “979” must have a 2-digit or 5-digit add-on code. The EAN-13 barcode with the add-on code is then transmitted. If the required add-on code is not found, the EAN-13 barcode is discarded.

Do Not Require Add-On Code: If you have selected **Require Add-On Code**, and you want to disable this feature, scan **Do Not Require Add-On Code**. EAN-13 barcodes are handled, depending on your selection for the “Add-On Code Required” feature.

@E139790
**** Do Not Require Add-On Code**

@E139791
Require Add-On Code

@SETUPE1

Enter Setup

UPC-E

Restore Factory Defaults

@UPEDEF

Restore the Factory Defaults of UPC-E

Enable/Disable UPC-E

@UPEENA1

**** Enable UPC-E**

@UPEENA0

Disable UPC-E

If the scanner fails to identify UPC-E barcodes, you may first try this solution by scanning the **Enter Setup** barcode and then **Enable UPC-E** barcode.

Transmit Check Character

UPC-E is 8 digits in length with the last one as its check character used to verify the integrity of the data.

@UPECHK2

**** Transmit UPC-E Check Character**

@UPECHK1

Do Not Transmit UPC-E Check Character

@SETUPE0

**** Exit Setup**

@SETUPE1

Enter Setup

2-Digit Add-On Code

A UPC-E barcode can be augmented with a two-digit add-on code to form a new one. In the example below, the part surrounded by blue dotted line is a UPC-E barcode while the part circled by red dotted line is a two-digit add-on code.

@UPEAD20

**** Disable 2-Digit Add-On Code**

@UPEAD21

Enable 2-Digit Add-On Code

Disable 2-Digit Add-On Code: The scanner decodes UPC-E and ignores the add-on code when presented with a UPC-E plus 2-digit add-on barcode. It can also decode UPC-E barcodes without 2-digit add-on codes.

Enable 2-Digit Add-On Code: The scanner decodes a mix of UPC-E barcodes with and without 2-digit add-on codes.

@SETUPE0

**** Exit Setup**

@SETUPE1

Enter Setup

5-Digit Add-On Code

A UPC-E barcode can be augmented with a five-digit add-on code to form a new one. In the example below, the part surrounded by blue dotted line is a UPC-E barcode while the part circled by red dotted line is a five-digit add-on code.

@UPEAD50

**** Disable 5-Digit Add-On Code**

@UPEAD51

Enable 5-Digit Add-On Code

Disable 5-Digit Add-On Code: The scanner decodes UPC-E and ignores the add-on code when presented with a UPC-E plus 5-digit add-on barcode. It can also decode UPC-E barcodes without 5-digit add-on codes.

Enable 5-Digit Add-On Code: The scanner decodes a mix of UPC-E barcodes with and without 5-digit add-on codes.

Add-On Code Required

When **UPC-E Add-On Code Required** is selected, the scanner will only read UPC-E barcodes that contain add-on codes.

@UPEREQ0

**** UPC-E Add-On Code Not Required**

@UPEREQ1

UPC-E Add-On Code Required

@SETUPE0

**** Exit Setup**

@SETUPE1

Enter Setup

Transmit System Character

@UPEPRE1

**** Transmit System Character**

@UPEPRE0

Do Not Transmit System Character

Convert UPC-E to UPC-A

Convert UPC-E to UPC-A: Convert UPC-E (zero suppressed) decoded data to UPC-A format before transmission. After conversion, the data follows UPC-A format and is affected by UPC-A programming selections (e.g., Preamble, Check Character).

Do Not Convert UPC-E to UPC-A: UPC-E decoded data is transmitted as UPC-E data, without conversion.

@UPEEXP0

**** Do Not Convert UPC-E to UPC-A**

@UPEEXP1

Convert UPC-E to UPC-A

@SETUPE0

**** Exit Setup**

@SETUPE1

Enter Setup

UPC-A

Restore Factory Defaults

@UPADEF

Restore the Factory Defaults of UPC-A

Enable/Disable UPC-A

@UPAENA1

**** Enable UPC-A**

@UPAENA0

Disable UPC-A

If the scanner fails to identify UPC-A barcodes, you may first try this solution by scanning the **Enter Setup** barcode and then **Enable UPC-A** barcode.

Transmit Check Character

UPC-A is 13 digits in length with the last one as its check character used to verify the integrity of the data.

@UPACHK2

**** Transmit UPC-A Check Character**

@UPACHK1

Do Not Transmit UPC-A Check Character

@SETUPE0

**** Exit Setup**

@SETUPE1

Enter Setup

2-Digit Add-On Code

A UPC-A barcode can be augmented with a two-digit add-on code to form a new one. In the example below, the part surrounded by blue dotted line is a UPC-A barcode while the part circled by red dotted line is a two-digit add-on code.

@UPAAD20

**** Disable 2-Digit Add-On Code**

@UPAAD21

Enable 2-Digit Add-On Code

Disable 2-Digit Add-On Code: The scanner decodes UPC-A and ignores the add-on code when presented with a UPC-A plus 2-digit add-on barcode. It can also decode UPC-A barcodes without 2-digit add-on codes.

Enable 2-Digit Add-On Code: The scanner decodes a mix of UPC-A barcodes with and without 2-digit add-on codes.

@SETUPE0

**** Exit Setup**

@SETUPE1

Enter Setup

5-Digit Add-On Code

A UPC-A barcode can be augmented with a five-digit add-on code to form a new one. In the example below, the part surrounded by blue dotted line is a UPC-A barcode while the part circled by red dotted line is a five-digit add-on code.

@UPAAD50

**** Disable 5-Digit Add-On Code**

@UPAAD51

Enable 5-Digit Add-On Code

Disable 5-Digit Add-On Code: The scanner decodes UPC-A and ignores the add-on code when presented with a UPC-A plus 5-digit add-on barcode. It can also decode UPC-A barcodes without 5-digit add-on codes.

Enable 5-Digit Add-On Code: The scanner decodes a mix of UPC-A barcodes with and without 5-digit add-on codes.

Add-On Code Required

When **UPC-A Add-On Code Required** is selected, the scanner will only read UPC-A barcodes that contain add-on codes.

@UPAREQ0

**** UPC-A Add-On Code Not Required**

@UPAREQ1

UPC-A Add-On Code Required

@SETUPE0

**** Exit Setup**

@SETUPE1

Enter Setup

Transmit Preamble Character

Preamble characters (Country Code and System Character) can be transmitted as part of a UPC-A barcode. Select one of the following options for transmitting UPC-A preamble to the host device: transmit system character only or transmit system character and country code (“0” for USA), or transmit no preamble.

@UPAPRE0

No Preamble

@UPAPRE1

**** System Character**

@UPAPRE2

System Character & Country Code

@SETUPE0

**** Exit Setup**

@SETUPE1

Enter Setup

Interleaved 2 of 5

Restore Factory Defaults

@I25DEF

Restore the Factory Defaults of Interleaved 2 of 5

Enable/Disable Interleaved 2 of 5

@I25ENA1

**** Enable Interleaved 2 of 5**

@I25ENA0

Disable Interleaved 2 of 5

If the scanner fails to identify Interleaved 2 of 5 barcodes, you may first try this solution by scanning the **Enter Setup** barcode and then **Enable Interleaved 2 of 5** barcode.

@SETUPE0

**** Exit Setup**

@SETUPE1

Enter Setup

Set Length Range for Interleaved 2 of 5

The scanner can be configured to only decode Interleaved 2 of 5 barcodes with lengths that fall between (inclusive) the minimum and maximum lengths. To accomplish it, you need to set the minimum and maximum lengths.

@I25MIN

Set the Minimum Length (Default: 6)

@I25MAX

Set the Maximum Length (Default: 100)

If minimum length is set to be greater than maximum length, the scanner only decodes Interleaved 2 of 5 barcodes with either the minimum or maximum length. If minimum length is same as maximum length, only Interleaved 2 of 5 barcodes with that length are to be decoded.

Set the scanner to decode Interleaved 2 of 5 barcodes containing between 8 and12 characters:

1. Scan the **Enter Setup** barcode.
2. Scan the **Set the Minimum Length** barcode.
3. Scan the numeric barcode “8” from the “Digit Barcodes” section in Appendix.
4. Scan the **Save** barcode from the “Save/Cancel Barcodes” section in Appendix.
5. Scan the **Set the Maximum Length** barcode.
6. Scan the numeric barcodes “1” and “2” from the “Digit Barcodes” section in Appendix.
7. Scan the **Save** barcode from the “Save/Cancel Barcodes” section in Appendix.
8. Scan the **Exit Setup** barcode.

@SETUPE0

**** Exit Setup**

@SETUPE1

Enter Setup

Check Character Verification

A check character is optional for Interleaved 2 of 5 and can be added as the last character. It is a calculated value used to verify the integrity of the data.

- ✧ **Disable:** The scanner transmits Interleaved 2 of 5 barcodes as is.
- ✧ **Do Not Transmit Check Character After Verification:** The scanner checks the integrity of all Interleaved 2 of 5 barcodes to verify that the data complies with the check character algorithm. Barcodes passing the check will be transmitted except the last digit, whereas those failing it will not be transmitted.
- ✧ **Transmit Check Character After Verification:** The scanner checks the integrity of all Interleaved 2 of 5 barcodes to verify that the data complies with the check character algorithm. Barcodes passing the check will be transmitted, whereas those failing it will not be transmitted.

Since Interleaved 2 of 5 must always have an even number of digits, a zero may need to be added as the first digit when the check character is added. The check character is automatically generated when making Interleaved 2 of 5 barcodes.

@I25CHK0

**** Disable**

@I25CHK1

Do Not Transmit Check Character After Verification

@I25CHK2

Transmit Check Character After Verification

If the **Do Not Transmit Check Character After Verification** option is enabled, Interleaved 2 of 5 barcodes with a length that is less than the configured minimum length after having the check character excluded will not be decoded. (For example, when the **Do Not Transmit Check Character After Verification**option is enabled and the minimum length is set to 4, Interleaved 2 of 5 barcodes with a total length of 4 characters including the check character cannot be read.)

@SETUPE0

**** Exit Setup**

@SETUPE1

Enter Setup

Febraban

Disable/Enable Febraban

@I25FBB0

**** Disable Febraban**

@I25FBB1

Enable Febraban, Do Not Expand

@I25FBB2

Enable Febraban, Expand

Transmit Delay per Character

Transmit Delay per Character applies to both Expanded and Unexpanded Febraban. This feature is available only when USB HID Keyboard is enabled.

@FEBSEN0

**** Disable Transmit Delay per Character**

@FEBSEN1

Enable Transmit Delay per Character

@SETUPE0

**** Exit Setup**

@SETUPE1

Enter Setup

You may select an appropriate delay value from the options below as per your actual needs.

@FEBSDT0

0ms

@FEBSDT5

5ms

@FEBSDT10

10ms

@FEBSDT15

15ms

@FEBSDT20

20ms

@FEBSDT25

25ms

@FEBSDT30

30ms

@FEBSDT35

35ms

@SETUPE0

**** Exit Setup**

@SETUPE1

Enter Setup

@FEBSDT40

40ms

@FEBSDT45

45ms

@FEBSDT50

50ms

@FEBSDT55

55ms

@FEBSDT60

60ms

@FEBSDT65

65ms

@FEBSDT70

**** 70ms**

@FEBSDT75

75ms

@SETUPE0

**** Exit Setup**

@SETUPE1

Enter Setup

Transmit Delay per 12 Characters

Transmit Delay per 12 Characters applies to Expanded Febraban only. This feature is available only when USB HID Keyboard is enabled.

@FEBMEN0

**** Disable Transmit Delay per 12 Characters**

@FEBMEN1

Enable Transmit Delay per 12 Characters

You may select an appropriate delay value from the options below as per your actual needs.

@FEBMDT0

0ms

@FEBMDT1

300ms

@FEBMDT2

400ms

@SETUPE0

**** Exit Setup**

@SETUPE1

Enter Setup

@FEBMDT3

**** 500ms**

@FEBMDT4

600ms

@FEBMDT5

700ms

@FEBMDT6

800ms

@FEBMDT7

900ms

@SETUPE0

**** Exit Setup**

@SETUPE1

Enter Setup

ITF-14

ITF-14 is a special kind of Interleaved 2 of 5 with a length of 14 characters and the last character as the check character.

ITF-14 priority principle: Forthe Interleaved 2 of 5 barcodes with a length of 14 characters and the last character as the check character, the ITF-14 configurations shall take precedence over the Interleaved 2 of 5 settings.

Restore Factory Defaults

@I14DEF

Restore the Factory Defaults of ITF-14

Enable/Disable ITF-14

@I14ENA0

Disable ITF-14

@I14ENA1

**** Enable ITF-14 But Do Not Transmit Check Character**

@I14ENA2

Enable ITF-14 and Transmit Check Character

An example of the ITF-14 priority principle: when ITF-14 is enabled and Interleaved 2 of 5 is disabled, the scanner only decodes Interleaved 2 of 5 barcodes with a length of 14 characters and the last character as the check character.

@SETUPE0

**** Exit Setup**

@SETUPE1

Enter Setup

ITF-6

ITF-6 is a special kind of Interleaved 2 of 5 with a length of 6 characters and the last character as the check character.

ITF-6 priority principle: For the Interleaved 2 of 5 barcodes with a length of 6 characters and the last character as the check character, the ITF-6 configurations shall take precedence over the Interleaved 2 of 5 settings.

Restore Factory Defaults

@IT6DEF

Restore the Factory Defaults of ITF-6

Enable/Disable ITF-6

@IT6ENA0

**** Disable ITF-6**

@IT6ENA1

Enable ITF-6 But Do Not Transmit Check Character

@IT6ENA2

Enable ITF-6 and Transmit Check Character

An example of the ITF-6 priority principle: when ITF-6 is enabled and Interleaved 2 of 5 is disabled, the scanner only decodes Interleaved 2 of 5 barcodes with a length of 6 characters and the last character as the check character.

@SETUPE0

**** Exit Setup**

@SETUPE1

Enter Setup

Matrix 2 of 5

Restore Factory Defaults

@M25DEF

Restore the Factory Defaults of Matrix 2 of 5

Enable/Disable Matrix 2 of 5

@M25ENA1

Enable Matrix 2 of 5

@M25ENA0

**** Disable Matrix 2 of 5**

If the scanner fails to identify Matrix 2 of 5 barcodes, you may first try this solution by scanning the **Enter Setup** barcode and then **Enable Matrix 2 of 5** barcode.

@SETUPE0

**** Exit Setup**

Set Length Range for Matrix 2 of 5

The scanner can be configured to only decode Matrix 2 of 5 barcodes with lengths that fall between (inclusive) the minimum and maximum lengths. To accomplish it, you need to set the minimum and maximum lengths.

@M25MIN

Set the Minimum Length (Default: 6)

@M25MAX

Set the Maximum Length (Default: 127)

If minimum length is set to be greater than maximum length, the scanner only decodes Matrix 2 of 5 barcodes with either the minimum or maximum length. If minimum length is same as maximum length, only Matrix 2 of 5 barcodes with that length are to be decoded.

Set the scanner to decode Matrix 2 of 5 barcodes containing between 8 and12 characters:

1. Scan the **Enter Setup** barcode.
2. Scan the **Set the Minimum Length** barcode.
3. Scan the numeric barcode “8” from the “Digit Barcodes” section in Appendix.
4. Scan the **Save** barcode from the “Save/Cancel Barcodes” section in Appendix.
5. Scan the **Set the Maximum Length** barcode.
6. Scan the numeric barcodes “1” and “2” from the “Digit Barcodes” section in Appendix.
7. Scan the **Save** barcode from the “Save/Cancel Barcodes” section in Appendix.
8. Scan the **Exit Setup** barcode.

Check Character Verification

A check character is optional for Matrix 2 of 5 and can be added as the last character. It is a calculated value used to verify the integrity of the data.

- **Disable:** The scanner transmitsMatrix 2 of 5 barcodes as is.
- **Do Not Transmit Check Character After Verification:** The scanner checks the integrity of all Matrix 2 of 5 barcodes to verify that the data complies with the check character algorithm. Barcodes passing the check will be transmitted except the last digit, whereas those failing it will not be transmitted.
- **Transmit Check Character After Verification:** The scanner checks the integrity of all Matrix 2 of 5 barcodes to verify that the data complies with the check character algorithm. Barcodes passing the check will be transmitted, whereas those failing it will not be transmitted.

Since Matrix 2 of 5 must always have an even number of digits, a zero may need to be added as the first digit when the check character is added. The check character is automatically generated when making Matrix 2 of 5 barcodes.

@M25CHK0
Disable

@M25CHK1
**** Do Not Transmit Check Character After Verification**

@M25CHK2
Transmit Check Character After Verification

If the **Do Not Transmit Check Character After Verification** option is enabled, Matrix 2 of 5 barcodes with a length that is less than the configured minimum length after having the check character excluded will not be decoded. (For example, when the **Do Not Transmit Check Character After Verification** option is enabled and the minimum length is set to 4, Matrix 2 of 5 barcodes with a total length of 4 characters including the check character cannot be read.)

@SETUPE1

Enter Setup

Code 39

Restore Factory Defaults

@C39DEF

Restore the Factory Defaults of Code 39

Enable/Disable Code 39

@C39ENA1

**** Enable Code 39**

@C39ENA0

Disable Code 39

If the scanner fails to identify Code 39 barcodes, you may first try this solution by scanning the **Enter Setup** barcode and then **Enable Code 39** barcode.

@SETUPE0

**** Exit Setup**

Set Length Range for Code 39

The scanner can be configured to only decode Code 39 barcodes with lengths that fall between (inclusive) the minimum and maximum lengths. To accomplish it, you need to set the minimum and maximum lengths.

@C39MIN

Set the Minimum Length (Default: 1)

@C39MAX

Set the Maximum Length (Default: 127)

If minimum length is set to be greater than maximum length, the scanner only decodes Code 39 barcodes with either the minimum or maximum length. If minimum length is same as maximum length, only Code 39 barcodes with that length are to be decoded.

Set the scanner to decode Code 39 barcodes containing between 8 and 12 characters:

1. Scan the **Enter Setup** barcode.
2. Scan the **Set the Minimum Length** barcode.
3. Scan the numeric barcode “8” from the “Digit Barcodes” section in Appendix.
4. Scan the **Save** barcode from the “Save/Cancel Barcodes” section in Appendix.
5. Scan the **Set the Maximum Length** barcode.
6. Scan the numeric barcodes “1” and “2” from the “Digit Barcodes” section in Appendix.
7. Scan the **Save** barcode from the “Save/Cancel Barcodes” section in Appendix.
8. Scan the **Exit Setup** barcode.

@SETUPE1

Enter Setup

Check Character Verification

A check character is optional for Code 39 and can be added as the last character. It is a calculated value used to verify the integrity of the data.

- **Disable:** The scanner transmitsCode 39 barcodes as is.
- **Do Not Transmit Check Character After Verification:** The scanner checks the integrity of all Code 39 barcodes to verify that the data complies with the check character algorithm. Barcodes passing the check will be transmitted except the last digit, whereas those failing it will not be transmitted.
- **Transmit Check Character After Verification:** The scanner checks the integrity of all Code 39 barcodes to verify that the data complies with the check character algorithm. Barcodes passing the check will be transmitted, whereas those failing it will not be transmitted.

@C39CHK0

**** Disable**

@C39CHK1

Do Not Transmit Check Character After Verification

@C39CHK2

Transmit Check Character After Verification

If the **Do Not Transmit Check Character After Verification** option is enabled, Code 39 barcodes with a length that is less than the configured minimum length after having the check character excluded will not be decoded. (For example, when the **Do Not Transmit Check Character After Verification** option is enabled and the minimum length is set to 4, Code 39 barcodes with a total length of 4 characters including the check character cannot be read.)

@SETUPE0

**** Exit Setup**

@SETUPE1

Enter Setup

Transmit Start/Stop Character

Code 39 uses an asterisk (*) for both the start and the stop characters. You can choose whether or not to transmit the start/stop characters by scanning the appropriate barcode below.

@C39TSC0

**** Do Not Transmit Start/Stop Character**

@C39TSC1

Transmit Start/Stop Character

Enable/Disable Code 39 Full ASCII

The scanner can be configured to identify all ASCII characters by scanning the appropriate barcode below.

@C39ASC0

Disable Code 39 Full ASCII

@C39ASC1

**** Enable Code 39 Full ASCII**

@SETUPE0

**** Exit Setup**

@SETUPE1

Enter Setup

Enable/Disable Code 32 (Italian Pharma Code)

Code 32 is a variant of Code 39 used by the Italian pharmaceutical industry. Scan the appropriate bar code below to enable or disable Code 32. Code 39 must be enabled and Code 39 check character verification must be disabled for this parameter to function.

@C39E320

**** Disable Code 32**

@C39E321

Enable Code 32

Code 32 Prefix

Scan the appropriate barcode below to enable or disable adding the prefix character “A” to all Code 32 barcodes. Code 32 must be enabled for this parameter to function.

@C39S320

**** Disable Code 32 Prefix**

@C39S321

Enable Code 32 Prefix

@SETUPE0

**** Exit Setup**

@SETUPE1

Enter Setup

Transmit Code 32 Start/Stop Character

Code 32 must be enabled for this parameter to function.

@C39T320

**** Do Not Transmit Code 32 Start/Stop Character**

@C39T321

Transmit Code 32 Start/Stop Character

Transmit Code 32 Check Character

Code 32 must be enabled for this parameter to function.

@C39C320

**** Do Not Transmit Code 32 Check Character**

@C39C321

Transmit Code 32 Check Character

@SETUPE0

**** Exit Setup**

@SETUPE1

Enter Setup

Codabar

Restore Factory Defaults

@CBADEF

Restore the Factory Defaults of Codabar

Enable/Disable Codabar

@CBAENA1

**** Enable Codabar**

@CBAENA0

Disable Codabar

If the scanner fails to identify Codabar barcodes, you may first try this solution by scanning the **Enter Setup** barcode and then **Enable Codabar** barcode.

@SETUPE0

**** Exit Setup**

@SETUPE1

Enter Setup

Set Length Range for Codabar

The scanner can be configured to only decode Codabar barcodes with lengths that fall between (inclusive) the minimum and maximum lengths. To accomplish it, you need to set the minimum and maximum lengths.

@CBAMIN

Set the Minimum Length (Default: 1)

@CBAMAX

Set the Maximum Length (Default: 127)

If minimum length is set to be greater than maximum length, the scanner only decodes Codabar barcodes with either the minimum or maximum length. If minimum length is same as maximum length, only Codabar barcodes with that length are to be decoded.

Set the scanner to decode Codabar barcodes containing between 8 and 12 characters:

1. Scan the **Enter Setup** barcode.
2. Scan the **Set the Minimum Length** barcode.
3. Scan the numeric barcode “8” from the “Digit Barcodes” section in Appendix.
4. Scan the **Save** barcode from the “Save/Cancel Barcodes” section in Appendix.
5. Scan the **Set the Maximum Length** barcode.
6. Scan the numeric barcodes “1” and “2” from the “Digit Barcodes” section in Appendix.
7. Scan the **Save** barcode from the “Save/Cancel Barcodes” section in Appendix.
8. Scan the **Exit Setup** barcode.

@SETUPE0

**** Exit Setup**

@SETUPE1

Enter Setup

Check Character Verification

A check character is optional for Codabar and can be added as the last character. It is a calculated value used to verify the integrity of the data.

- **Disable:** The scanner transmits Codabar barcodes as is.
- **Do Not Transmit Check Character After Verification:** The scanner checks the integrity of all Codabar barcodes to verify that the data complies with the check character algorithm. Barcodes passing the check will be transmitted except the last digit, whereas those failing it will not be transmitted.
- **Transmit Check Character After Verification:** The scanner checks the integrity of all Codabar barcodes to verify that the data complies with the check character algorithm. Barcodes passing the check will be transmitted, whereas those failing it will not be transmitted.

@CBACHK0

**** Disable**

@CBACHK1

Do Not Transmit Check Character After Verification

@CBACHK2

Transmit Check Character After Verification

If the **Do Not Transmit Check Character After Verification** option is enabled, Codabar barcodes with a length that is less than the configured minimum length after having the check character excluded will not be decoded. (For example, when the **Do Not Transmit Check Character After Verification** option is enabled and the minimum length is set to 4, Codabar barcodes with a total length of 4 characters including the check character cannot be read.)

@SETUPE0

**** Exit Setup**

@SETUPE1

Enter Setup

Start/Stop Character

You can set the start/stop characters and choose whether or not to transmit the start/stop characters by scanning the appropriate barcode below.

@CBATSC0

**** Do Not Transmit Start/Stop Character**

@CBATSC1

Transmit Start/Stop Character

@CBASCF0

**** ABCD/ABCD as the Start/Stop Character**

@CBASCF1

ABCD/TN*E as the Start/Stop Character

@CBASCF2

abcd/abcd as the Start/Stop Character

@CBASCF3

abcd/tn*e as the Start/Stop Character

@SETUPE0

**** Exit Setup**

@SETUPE1

Enter Setup

Code 93

Restore Factory Defaults

@C93DEF

Restore the Factory Defaults of Code 93

Enable/Disable Code 93

@C93ENA1

**** Enable Code 93**

@C93ENA0

Disable Code 93

If the scanner fails to identify Code 93 barcodes, you may first try this solution by scanning the **Enter Setup** barcode and then **Enable Code 93** barcode.

@SETUPE0

**** Exit Setup**

@SETUPE1

Enter Setup

Set Length Range for Code 93

The scanner can be configured to only decode Code 93 barcodes with lengths that fall between (inclusive) the minimum and maximum lengths. To accomplish it, you need to set the minimum and maximum lengths.

@C93MIN

Set the Minimum Length (Default: 3)

@C93MAX

Set the Maximum Length (Default: 127)

If minimum length is set to be greater than maximum length, the scanner only decodes Code 93 barcodes with either the minimum or maximum length. If minimum length is same as maximum length, only Code 93 barcodes with that length are to be decoded.

Set the scanner to decode Code 93 barcodes containing between 8 and 12 characters:

1. Scan the **Enter Setup** barcode.
2. Scan the **Set the Minimum Length** barcode.
3. Scan the numeric barcode “8” from the “Digit Barcodes” section in Appendix.
4. Scan the **Save** barcode from the “Save/Cancel Barcodes” section in Appendix.
5. Scan the **Set the Maximum Length** barcode.
6. Scan the numeric barcodes “1” and “2” from the “Digit Barcodes” section in Appendix.
7. Scan the **Save** barcode from the “Save/Cancel Barcodes” section in Appendix.
8. Scan the **Exit Setup** barcode.

@SETUPE0

**** Exit Setup**

@SETUPE1

Enter Setup

Check Character Verification

Check characters are optional for Code 93 and can be added as the last two characters, which are calculated values used to verify the integrity of the data.

- **Disable:** The scanner transmits Code 93 barcodes as is.
- **Do Not Transmit Check Character After Verification:** The scanner checks the integrity of all Code 93 barcodes to verify that the data complies with the check character algorithm. Barcodes passing the checks will be transmitted except the last two digits, whereas those failing them will not be transmitted.
- **Transmit Check Character After Verification:** The scanner checks the integrity of all Code 93 barcodes to verify that the data complies with the check character algorithm. Barcodes passing the checks will be transmitted, whereas those failing them will not be transmitted.

@C93CHK0

Disable

@C93CHK1

**** Do Not Transmit Check Character After Verification**

@C93CHK2

Transmit Check Character After Verification

If the **Do Not Transmit Check Character After Verification** option is enabled, Code 93 barcodes with a length that is less than the configured minimum length after having the two check characters excluded will not be decoded. (For example, when the **Do Not Transmit Check Character After Verification** option is enabled and the minimum length is set to 4, Code 93 barcodes with a total length of 4 characters including the two check characters cannot be read.)

@SETUPE0

**** Exit Setup**

@SETUPE1

Enter Setup

GS1-128 (UCC/EAN-128)

Restore Factory Defaults

@GS1DEF

Restore the Factory Defaults of GS1-128

Enable/Disable GS1-128

@GS1ENA1

**** Enable GS1-128**

@GS1ENA0

Disable GS1-128

If the scanner fails to identify GS1-128 barcodes, you may first try this solution by scanning the **EnterSetup** barcode and then **Enable GS1-128** barcode.

@SETUPE0

**** Exit Setup**

@SETUPE1

Enter Setup

Set Length Range for GS1-128

The scanner can be configured to only decode GS1-128 barcodes with lengths that fall between (inclusive) the minimum and maximum lengths. To accomplish it, you need to set the minimum and maximum lengths.

@GS1MIN

Set the Minimum Length (Default: 1)

@GS1MAX

Set the Maximum Length (Default: 127)

If minimum length is set to be greater than maximum length, the scanner only decodes GS1-128 barcodes with either the minimum or maximum length. If minimum length is same as maximum length, only GS1-128 barcodes with that length are to be decoded.

Set the scanner to decode GS1-128 barcodes containing between 8 and 12 characters:

1. Scan the **Enter Setup** barcode.
2. Scan the **Set the Minimum Length** barcode.
3. Scan the numeric barcode “8” from the “Digit Barcodes” section in Appendix.
4. Scan the **Save** barcode from the “Save/Cancel Barcodes” section in Appendix.
5. Scan the **Set the Maximum Length** barcode.
6. Scan the numeric barcodes “1” and “2” from the “Digit Barcodes” section in Appendix.
7. Scan the **Save** barcode from the “Save/Cancel Barcodes” section in Appendix.
8. Scan the **Exit Setup** barcode.

@SETUPE0

**** Exit Setup**

@SETUPE1

Enter Setup

Transmit Check Character

@GS1CHK2

Transmit GS1-128 Check Character

@GS1CHK1

**** Do Not Transmit GS1-128 Check Character**

@SETUPE0

**** Exit Setup**

@SETUPE1

Enter Setup

GS1 Databar (RSS)

Restore Factory Defaults

@RSSDEF

Restore the Factory Defaults of GS1 Databar

Enable/Disable GS1 Databar

@RSSENA1

**** Enable GS1 Databar**

@RSSENA0

Disable GS1 Databar

If the scanner fails to identify GS1 Databar barcodes, you may first try this solution by scanning the **Enter Setup** barcode and then **Enable GS1 Databar** barcode.

Transmit Application Identifier “01”

@RSSTAI1

**** Transmit Application Identifier “01”**

@RSSTAI0

Do Not Transmit Application Identifier “01”

@SETUPE0

**** Exit Setup**

@SETUPE1

Enter Setup

Code 11

Restore Factory Defaults

@C11DEF

Restore the Factory Defaults of Code 11

Enable/Disable Code 11

@C11ENA1

**** Enable Code 11**

@C11ENA0

Disable Code 11

If the scanner fails to identify Code 11 barcodes, you may first try this solution by scanning the **Enter Setup** barcode and then **Enable Code 11** barcode.

@SETUPE0

**** Exit Setup**

@SETUPE1

Enter Setup

Set Length Range for Code 11

The scanner can be configured to only decode Code 11 barcodes with lengths that fall between (inclusive) the minimum and maximum lengths. To accomplish it, you need to set the minimum and maximum lengths.

@C11MIN

Set the Minimum Length (Default: 2)

@C11MAX

Set the Maximum Length (Default: 127)

If minimum length is set to be greater than maximum length, the scanner only decodes Code 11 barcodes with either the minimum or maximum length. If minimum length is same as maximum length, only Code 11 barcodes with that length are to be decoded.

Set the scanner to decode Code 11 barcodes containing between 8 and 12 characters:

1. Scan the **Enter Setup** barcode.
2. Scan the **Set the Minimum Length** barcode.
3. Scan the numeric barcode “8” from the “Digit Barcodes” section in Appendix.
4. Scan the **Save** barcode from the “Save/Cancel Barcodes” section in Appendix.
5. Scan the **Set the Maximum Length** barcode.
6. Scan the numeric barcodes “1” and “2” from the “Digit Barcodes” section in Appendix.
7. Scan the **Save** barcode from the “Save/Cancel Barcodes” section in Appendix.
8. Scan the **Exit Setup** barcode.

@SETUPE0

**** Exit Setup**

@SETUPE1

Enter Setup

Check Character Verification

Check characters are optional for Code 11 and can be added as the last one or two characters, which are calculated values used to verify the integrity of the data.

If the **Disable** option is enabled, the scanner transmits Code 11 barcodes as is.

@C11CHK0

Disable

@C11CHK1

**** One Check Character, MOD11**

@C11CHK2

Two Check Characters, MOD11/MOD11

@C11CHK3

Two Check Characters, MOD11/MOD9

@C11CHK4

One Check Character, MOD11 (Len<=11)

Two Check Characters, MOD11/MOD11 (Len>11)

@C11CHK5

One Check Character, MOD11 (Len<=11)

Two Check Characters, MOD11/MOD9 (Len>11

@SETUPE0

**** Exit Setup**

@SETUPE1

Enter Setup

Transmit Check Character

@C11TCK0

**** Do Not Transmit Code 11 Check Character**

@C11TCK1

Transmit Code 11 Check Character

If you select a check character algorithm and the **Do Not Transmit Check Character** option, Code 11 barcodes with a length that is less than the configured minimum length after having the check character(s) excluded will not be decoded. (For example, when the **One Check Character, MOD11** and **Do Not Transmit Check Character** options are enabled and the minimum length is set to 4, Code 11 barcodes with a total length of 4 characters including the check character cannot be read.)

@SETUPE0

**** Exit Setup**

@SETUPE1

Enter Setup

ISBN

Restore Factory Defaults

@ISBDEF

Restore the Factory Defaults of ISBN

Enable/Disable ISBN

@ISBENA1

Enable ISBN

@ISBENA0

**** Disable ISBN**

If the scanner fails to identify ISBN barcodes, you may first try this solution by scanning the **Enter Setup** barcode and then **Enable ISBN** barcode.

@SETUPE0

**** Exit Setup**

@SETUPE1

Enter Setup

Set ISBN Format

@ISBT101

ISBN-10

@ISBT100

**** ISBN-13**

2-Digit Add-On Code

An ISBN barcode can be augmented with a two-digit add-on code to form a new one.

@ISBAD20

**** Disable 2-Digit Add-On Code**

@ISBAD21

Enable 2-Digit Add-On Code

Disable 2-Digit Add-On Code: The scanner decodes ISBN and ignores the add-on code when presented with an ISBN plus 2-digit add-on barcode. It can also decode ISBN barcodes without 2-digit add-on codes.
Enable 2-Digit Add-On Code: The scanner decodes a mix of ISBN barcodes with and without 2-digit add-on codes.

@SETUPE0

**** Exit Setup**

@SETUPE1

Enter Setup

5-Digit Add-On Code

An ISBN barcode can be augmented with a five-digit add-on code to form a new one.

@ISBAD50

**** Disable 5-Digit Add-On Code**

@ISBAD51

Enable 5-Digit Add-On Code

Disable 5-Digit Add-On Code: The scanner decodes ISBN and ignores the add-on code when presented with an ISBN plus 5-digit add-on barcode. It can also decode ISBN barcodes without 5-digit add-on codes. **Enable 5-Digit Add-On Code:** The scanner decodes a mix of ISBN barcodes with and without 5-digit add-on codes.

Add-On Code Required

When **ISBN Add-On Code Required** is selected, the scanner will only read ISBN barcodes that contain add-on codes.

@ISBREQ0

**** ISBN Add-On Code Not Required**

@ISBREQ1

ISBN Add-On Code Required

@SETUPE0

**** Exit Setup**

@SETUPE1

Enter Setup

ISSN

Restore Factory Defaults

@ISSDEF

Restore the Factory Defaults of ISSN

Enable/Disable ISSN

@ISSENA1

Enable ISSN

@ISSENA0

**** Disable ISSN**

If the scanner fails to identify ISSN barcodes, you may first try this solution by scanning the **Enter Setup** barcode and then **Enable ISSN** barcode.

@SETUPE0

**** Exit Setup**

@SETUPE1

Enter Setup

2-Digit Add-On Code

An ISSN barcode can be augmented with a two-digit add-on code to form a new one.

@ISSAD20

**** Disable 2-Digit Add-On Code**

@ISSAD21

Enable 2-Digit Add-On Code

Disable 2-Digit Add-On Code: The scanner decodes ISSN and ignores the add-on code when presented with an ISSN plus 2-digit add-on barcode. It can also decode ISSN barcodes without 2-digit add-on codes. **Enable 2-Digit Add-On Code:** The scanner decodes a mix of ISSN barcodes with and without 2-digit add-on codes.

5-Digit Add-On Code

An ISSN barcode can be augmented with a five-digit add-on code to form a new one.

@ISSAD50

**** Disable 5-Digit Add-On Code**

@ISSAD51

Enable 5-Digit Add-On Code

Disable 5-Digit Add-On Code: The scanner decodes ISSN and ignores the add-on code when presented with an ISSN plus 5-digit add-on barcode. It can also decode ISSN barcodes without 5-digit add-on codes. **Enable 5-Digit Add-On Code:** The scanner decodes a mix of ISSN barcodes with and without 5-digit add-on codes.

@SETUPE0

**** Exit Setup**

@SETUPE1

Enter Setup

Add-On Code Required

When **ISSN Add-On Code Required** is selected, the scanner will only read ISSN barcodes that contain add-on codes.

@ISSREQ0

**** ISSN Add-On Code Not Required**

@ISSREQ1

ISSN Add-On Code Required

@SETUPE0

**** Exit Setup**

@SETUPE1

Enter Setup

Industrial 25

Restore Factory Defaults

@L25DEF

Restore the Factory Defaults of Industrial 25

Enable/Disable Industrial 25

@L25ENA1

**** Enable Industrial 25**

@L25ENA0

Disable Industrial 25

If the scanner fails to identify Industrial 25 barcodes, you may first try this solution by scanning the **Enter Setup** barcode and then **Enable Industrial 25** barcode.

@SETUPE0

**** Exit Setup**

@SETUPE1

Enter Setup

Set Length Range for Industrial 25

The scanner can be configured to only decode Industrial 25 barcodes with lengths that fall between (inclusive) the minimum and maximum lengths. To accomplish it, you need to set the minimum and maximum lengths.

@L25MIN

Set the Minimum Length (Default: 6)

@L25MAX

Set the Maximum Length (Default: 127)

If minimum length is set to be greater than maximum length, the scanner only decodes Industrial 25 barcodes with either the minimum or maximum length. If minimum length is same as maximum length, only Industrial 25 barcodes with that length are to be decoded.

Set the scanner to decode Industrial 25 barcodes containing between 8 and 12 characters:

1. Scan the **Enter Setup** barcode.
2. Scan the **Set the Minimum Length** barcode.
3. Scan the numeric barcode “8” from the “Digit Barcodes” section in Appendix.
4. Scan the **Save** barcode from the “Save/Cancel Barcodes” section in Appendix.
5. Scan the **Set the Maximum Length** barcode.
6. Scan the numeric barcodes “1” and “2” from the “Digit Barcodes” section in Appendix.
7. Scan the **Save** barcode from the “Save/Cancel Barcodes” section in Appendix.
8. Scan the **Exit Setup** barcode.

@SETUPE0

**** Exit Setup**

@SETUPE1

Enter Setup

Check Character Verification

A check character is optional for Industrial 25 and can be added as the last character. It is a calculated value used to verify the integrity of the data.

- **Disable:** The scanner transmits Industrial 25 barcodes as is.
- **Do Not Transmit Check Character After Verification:** The scanner checks the integrity of all Industrial 25 barcodes to verify that the data complies with the check character algorithm. Barcodes passing the check will be transmitted except the last digit, whereas those failing it will not be transmitted.
- **Transmit Check Character After Verification:** The scanner checks the integrity of all Industrial 25 barcodes to verify that the data complies with the check character algorithm. Barcodes passing the check will be transmitted, whereas those failing it will not be transmitted.

@L25CHK0

**** Disable**

@L25CHK1

Do Not Transmit Check Character After Verification

@L25CHK2

Transmit Check Character After Verification

If the **Do Not Transmit Check Character After Verification** option is enabled, Industrial 25 barcodes with a length that is less than the configured minimum length after having the check character excluded will not be decoded. (For example, when the **Do Not Transmit Check Character After Verification** option is enabled and the minimum length is set to 4, Industrial 25 barcodes with a total length of 4 characters including the check character cannot be read.)

@SETUPE0

**** Exit Setup**

@SETUPE1

Enter Setup

Standard 25

Restore Factory Defaults

@S25DEF

Restore the Factory Defaults of Standard 25

Enable/Disable Standard 25

@S25ENA1

**** Enable Standard 25**

@S25ENA0

Disable Standard 25

If the scanner fails to identify Standard 25 barcodes, you may first try this solution by scanning the **Enter Setup** barcode and then **Enable Standard 25** barcode.

@SETUPE0

**** Exit Setup**

@SETUPE1

Enter Setup

Set Length Range for Standard 25

The scanner can be configured to only decode Standard 25 barcodes with lengths that fall between (inclusive) the minimum and maximum lengths. To accomplish it, you need to set the minimum and maximum lengths.

@S25MIN

Set the Minimum Length (Default: 6)

@S25MAX

Set the Maximum Length (Default: 127)

If minimum length is set to be greater than maximum length, the scanner only decodes Standard 25 barcodes with either the minimum or maximum length. If minimum length is same as maximum length, only Standard 25 barcodes with that length are to be decoded.

Set the scanner to decode Standard 25 barcodes containing between 8 and 12 characters:

1. Scan the **Enter Setup** barcode.
2. Scan the **Set the Minimum Length** barcode.
3. Scan the numeric barcode “8” from the “Digit Barcodes” section in Appendix.
4. Scan the **Save** barcode from the “Save/Cancel Barcodes” section in Appendix.
5. Scan the **Set the Maximum Length** barcode.
6. Scan the numeric barcodes “1” and “2” from the “Digit Barcodes” section in Appendix.
7. Scan the **Save** barcode from the “Save/Cancel Barcodes” section in Appendix.
8. Scan the **Exit Setup** barcode.

@SETUPE0

**** Exit Setup**

@SETUPE1

Enter Setup

Check Character Verification

A check character is optional for Standard 25 and can be added as the last character. It is a calculated value used to verify the integrity of the data.

- **Disable:** The scanner transmits Standard 25 barcodes as is.
- **Do Not Transmit Check Character After Verification:** The scanner checks the integrity of all Standard 25 barcodes to verify that the data complies with the check character algorithm. Barcodes passing the check will be transmitted except the last digit, whereas those failing it will not be transmitted.
- **Transmit Check Character After Verification:** The scanner checks the integrity of all Standard 25 barcodes to verify that the data complies with the check character algorithm. Barcodes passing the check will be transmitted, whereas those failing it will not be transmitted.

@S25CHK0

**** Disable**

@S25CHK1

Do Not Transmit Check Character After Verification

@S25CHK2

Transmit Check Character After Verification

If the **Do Not Transmit Check Character After Verification** option is enabled, Standard 25 barcodes with a length that is less than the configured minimum length after having the check character excluded will not be decoded. (For example, when the **Do Not Transmit Check Character After Verification** option is enabled and the minimum length is set to 4, Standard 25 barcodes with a total length of 4 characters including the check character cannot be read.)

@SETUPE0

**** Exit Setup**

@SETUPE1

Enter Setup

Plessey

Restore Factory Defaults

@PLYDEF

Restore the Factory Defaults of Plessey

Enable/Disable Plessey

@PLYENA1

**** Enable Plessey**

@PLYENA0

Disable Plessey

If the scanner fails to identify Plessey barcodes, you may first try this solution by scanning the **Enter Setup** barcode and then **Enable Plessey** barcode.

@SETUPE0

**** Exit Setup**

@SETUPE1

Enter Setup

Set Length Range for Plessey

The scanner can be configured to only decode Plessey barcodes with lengths that fall between (inclusive) the minimum and maximum lengths. To accomplish it, you need to set the minimum and maximum lengths.

@PLYMIN

Set the Minimum Length (Default: 1)

@PLYMAX

Set the Maximum Length (Default: 127)

If minimum length is set to be greater than maximum length, the scanner only decodes Plessey barcodes with either the minimum or maximum length. If minimum length is same as maximum length, only Plessey barcodes with that length are to be decoded.

Set the scanner to decode Plessey barcodes containing between 8 and 12 characters:

1. Scan the **Enter Setup** barcode.
2. Scan the **Set the Minimum Length** barcode.
3. Scan the numeric barcode “8” from the “Digit Barcodes” section in Appendix.
4. Scan the **Save** barcode from the “Save/Cancel Barcodes” section in Appendix.
5. Scan the **Set the Maximum Length** barcode.
6. Scan the numeric barcodes “1” and “2” from the “Digit Barcodes” section in Appendix.
7. Scan the **Save** barcode from the “Save/Cancel Barcodes” section in Appendix.
8. Scan the **Exit Setup** barcode.

@SETUPE0

**** Exit Setup**

@SETUPE1

Enter Setup

Check Character Verification

Check characters are optional for Plessey and can be added as the last two characters, which are calculated values used to verify the integrity of the data.

- **Disable:** The scanner transmits Plessey barcodes as is.
- **Do Not Transmit Check Character After Verification:** The scanner checks the integrity of all Plessey barcodes to verify that the data complies with the check character algorithm. Barcodes passing the checks will be transmitted except the last two digits, whereas those failing them will not be transmitted.
- **Transmit Check Character After Verification:** The scanner checks the integrity of all Plessey barcodes to verify that the data complies with the check character algorithm. Barcodes passing the checks will be transmitted, whereas those failing them will not be transmitted.

@PLYCHK0

Disable

@PLYCHK1

**** Do Not Transmit Check Character After Verification**

@PLYCHK2

Transmit Check Character After Verification

If the **Do Not Transmit Check Character After Verification** option is enabled, Plessey barcodes with a length that is less than the configured minimum length after having the check characters excluded will not be decoded. (For example, when the **Do Not Transmit Check Character After Verification** option is enabled and the minimum length is set to 4, Plessey barcodes with a total length of 4 characters including the check characters cannot be read.)

@SETUPE0

**** Exit Setup**

@SETUPE1

Enter Setup

MSI-Plessey

Restore Factory Defaults

@MSIDEF

Restore the Factory Defaults of MSI-Plessey

Enable/Disable MSI-Plessey

@MSIENA1

**** Enable MSI-Plessey**

@MSIENA0

Disable MSI-Plessey

If the scanner fails to identify MSI-Plessey barcodes, you may first try this solution by scanning the **Enter Setup** barcode and then **Enable MSI-Plessey** barcode.

@SETUPE0

**** Exit Setup**

@SETUPE1

Enter Setup

Set Length Range for MSI-Plessey

The scanner can be configured to only decode MSI-Plessey barcodes with lengths that fall between (inclusive) the minimum and maximum lengths. To accomplish it, you need to set the minimum and maximum lengths.

@MSIMIN

Set the Minimum Length (Default: 2)

@MSIMAX

Set the Maximum Length (Default: 127)

If minimum length is set to be greater than maximum length, the scanner only decodes MSI-Plessey barcodes with either the minimum or maximum length. If minimum length is same as maximum length, only MSI-Plessey barcodes with that length are to be decoded.

Set the scanner to decode MSI-Plessey barcodes containing between 8 and 12 characters:

1. Scan the **Enter Setup** barcode.
2. Scan the **Set the Minimum Length** barcode.
3. Scan the numeric barcode “8” from the “Digit Barcodes” section in Appendix.
4. Scan the **Save** barcode from the “Save/Cancel Barcodes” section in Appendix.
5. Scan the **Set the Maximum Length** barcode.
6. Scan the numeric barcodes “1” and “2” from the “Digit Barcodes” section in Appendix.
7. Scan the **Save** barcode from the “Save/Cancel Barcodes” section in Appendix.
8. Scan the **Exit Setup** barcode.

@SETUPE0

**** Exit Setup**

@SETUPE1

Enter Setup

Check Character Verification

Check characters are optional for MSI-Plessey and can be added as the last one or two characters, which are calculated values used to verify the integrity of the data.

If the **Disable** option is enabled, the scanner transmits MSI-Plessey barcodes as is.

@MSICHK0

Disable

@MSICHK1

**** One Check Character, MOD10**

@MSICHK2

Two Check Characters, MOD10/MOD10

@MSICHK3

Two Check Characters, MOD10/MOD11

@SETUPE0

**** Exit Setup**

Transmit Check Character

@MSITCK1

**** Transmit MSI-Plessey Check Character**

@MSITCK0

Do Not Transmit MSI-Plessey Check Character

If you select a check character algorithm and the **Do Not Transmit Check Character** option, MSI-Plessey barcodes with a length that is less than the configured minimum length after having the check character(s) excluded will not be decoded. (For example, when the **One Check Character, MOD10** and **Do Not Transmit Check Character** options are enabled and the minimum length is set to 4, MSI-Plessey barcodes with a total length of 4 characters including the check character cannot be read.)

@SETUPE1

Enter Setup

AIM 128

Restore Factory Defaults

@AIMDEF

Restore the Factory Defaults of AIM 128

Enable/Disable AIM 128

@AIMENA1

**** Enable AIM 128**

@AIMENA0

Disable AIM 128

If the scanner fails to identify AIM 128 barcodes, you may first try this solution by scanning the **Enter Setup** barcode and then **Enable AIM 128** barcode.

Transmit Check Character

@AIMCHK2

Transmit AIM 128 Check Character

@AIMCHK1

**** Do Not Transmit AIM 128 Check Character**

@SETUPE0

**** Exit Setup**

@SETUPE1

Enter Setup

Set Length Range for AIM 128

The scanner can be configured to only decode AIM 128 barcodes with lengths that fall between (inclusive) the minimum and maximum lengths. To accomplish it, you need to set the minimum and maximum lengths.

@AIMMIN

Set the Minimum Length (Default: 1)

@AIMMAX

Set the Maximum Length (Default: 127)

If minimum length is set to be greater than maximum length, the scanner only decodes AIM 128 barcodes with either the minimum or maximum length. If minimum length is same as maximum length, only AIM 128 barcodes with that length are to be decoded.

Set the scanner to decode AIM 128 barcodes containing between 8 and 12 characters:

1. Scan the **Enter Setup** barcode.
2. Scan the **Set the Minimum Length** barcode.
3. Scan the numeric barcode “8” from the “Digit Barcodes” section in Appendix.
4. Scan the **Save** barcode from the “Save/Cancel Barcodes” section in Appendix.
5. Scan the **Set the Maximum Length** barcode.
6. Scan the numeric barcodes “1” and “2” from the “Digit Barcodes” section in Appendix.
7. Scan the **Save** barcode from the “Save/Cancel Barcodes” section in Appendix.
8. Scan the **Exit Setup** barcode.

@SETUPE0

**** Exit Setup**

@SETUPE1

Enter Setup

PDF417

Restore Factory Defaults

@PDFDEF

Restore the Factory Defaults of PDF417

Enable/Disable PDF417

@PDFENA1

**** Enable PDF417**

@PDFENA0

Disable PDF417

If the scanner fails to identify PDF417 barcodes, you may first try this solution by scanning the **Enter Setup** barcode and then **Enable PDF417** barcode.

@SETUPE0

**** Exit Setup**

@SETUPE1

Enter Setup

Set Length Range for PDF417

The scanner can be configured to only decode PDF417 barcodes with lengths that fall between (inclusive) the minimum and maximum lengths. To accomplish it, you need to set the minimum and maximum lengths.

@PDFMIN

Set the Minimum Length (Default: 1)

@PDFMAX

Set the Maximum Length (Default: 2710)

Minimum length is not allowed to be greater than maximum length. If you only want to read PDF417 barcodes with a specific length, set both minimum and maximum lengths to be that desired length.

Set the scanner to decode PDF417 barcodes containing between 8 and 12 characters:

1. Scan the **Enter Setup** barcode.
2. Scan the **Set the Minimum Length** barcode.
3. Scan the numeric barcode “8” from the “Digit Barcodes” section in Appendix.
4. Scan the **Save** barcode from the “Save/Cancel Barcodes” section in Appendix.
5. Scan the **Set the Maximum Length** barcode.
6. Scan the numeric barcodes “1” and “2” from the “Digit Barcodes” section in Appendix.
7. Scan the **Save** barcode from the “Save/Cancel Barcodes” section in Appendix.
8. Scan the **Exit Setup** barcode.

@SETUPE0

**** Exit Setup**

@SETUPE1

Enter Setup

PDF417 Twin Code

PDF417 twin code is 2 PDF417 barcodes paralleled vertically or horizontally. They must both be either regular or inverse barcodes. They must have similar specifications and be placed closely together.

There are 3 options for reading PDF417 twin codes:

- ✧ **Single PDF417 Only:** Read either PDF417 code.
- ✧ **Twin PDF417 Only:** Read both PDF417 codes.
- ✧ **Both Single & Twin:** Read both PDF417 codes. If successful, transmit as twin PDF417 only. Otherwise, try single PDF417 only.

@PDFDOU0

**** Single PDF417 Only**

@PDFDOU1

Twin PDF417 Only

@PDFDOU2

Both Single & Twin

Character Encoding

@PDFENC0

**** Default Character Encoding**

@PDFENC1

UTF-8

@SETUPE0

**** Exit Setup**

@SETUPE1

Enter Setup

QR Code

Restore Factory Defaults

@QRCDEF

Restore the Factory Defaults of QR Code

Enable/Disable QR Code

@QRCENA1

**** Enable QR Code**

@QRCENA0

Disable QR Code

If the scanner fails to identify QR Code barcodes, you may first try this solution by scanning the **Enter Setup** barcode and then **Enable QR Code** barcode.

@SETUPE0

**** Exit Setup**

@SETUPE1

Enter Setup

Set Length Range for QR Code

The scanner can be configured to only decode QR Code barcodes with lengths that fall between (inclusive) the minimum and maximum lengths. To accomplish it, you need to set the minimum and maximum lengths.

@QRCMIN

Set the Minimum Length (Default: 1)

@QRCMAX

Set the Maximum Length (Default: 7089)

Minimum length is not allowed to be greater than maximum length. If you only want to read QR Code barcodes with a specific length, set both minimum and maximum lengths to be that desired length.

Set the scanner to decode QR Code barcodes containing between 8 and 12 characters:

1. Scan the **Enter Setup** barcode.
2. Scan the **Set the Minimum Length** barcode.
3. Scan the numeric barcode “8” from the “Digit Barcodes” section in Appendix.
4. Scan the **Save** barcode from the “Save/Cancel Barcodes” section in Appendix.
5. Scan the **Set the Maximum Length** barcode.
6. Scan the numeric barcodes “1” and “2” from the “Digit Barcodes” section in Appendix.
7. Scan the **Save** barcode from the “Save/Cancel Barcodes” section in Appendix.
8. Scan the **Exit Setup** barcode.

@SETUPE0

**** Exit Setup**

QR Twin Code

QR twin code is 2 QR barcodes paralleled vertically or horizontally. They must both be either regular or inverse barcodes. They must have similar specifications and be placed closely together.

There are 3 options for reading QR twin codes:

- ✧ **Single QR Only:** Read either QR code.
- ✧ **Twin QR Only:** Read both QR codes. Transmission sequence: left (upper) QR code followed by right (lower) QR code.
- ✧ **Both Single & Twin:** Read both QR codes. If successful, transmit as twin QR only. Otherwise, try single QR only.

@QRCDOU0
**** Single QR Only**

@QRCDOU1
Twin QR Only

@QRCDOU2
Both Single & Twin

@SETUPE1

Enter Setup

Character Encoding

@QRCENC0

**** Default Character Encoding**

@QRCENC1

UTF-8

Micro QR

@QRCMCR0

Disable Micro QR

@QRCMCR1

**** Enable Micro QR**

@SETUPE0

**** Exit Setup**

@SETUPE1

Enter Setup

Data Matrix

Restore Factory Defaults

@DMCDEF

Restore the Factory Defaults of Data Matrix

Enable/Disable Data Matrix

@DMCENA1

**** Enable Data Matrix**

@DMCENA0

Disable Data Matrix

If the scanner fails to identify Data Matrix barcodes, you may first try this solution by scanning the **Enter Setup** barcode and then **Enable Data Matrix** barcode.

@SETUPE0

**** Exit Setup**

@SETUPE1

Enter Setup

Set Length Range for Data Matrix

The scanner can be configured to only decode Data Matrix barcodes with lengths that fall between (inclusive) the minimum and maximum lengths. To accomplish it, you need to set the minimum and maximum lengths.

@DMCMIN

Set the Minimum Length (Default: 1)

@DMCMAX

Set the Maximum Length (Default: 3116)

Minimum length is not allowed to be greater than maximum length. If you only want to read Data Matrix barcodes with a specific length, set both minimum and maximum lengths to be that desired length.

Set the scanner to decode Data Matrix barcodes containing between 8 and 12 characters:

1. Scan the **Enter Setup** barcode.
2. Scan the **Set the Minimum Length** barcode.
3. Scan the numeric barcode “8” from the “Digit Barcodes” section in Appendix.
4. Scan the **Save** barcode from the “Save/Cancel Barcodes” section in Appendix.
5. Scan the **Set the Maximum Length** barcode.
6. Scan the numeric barcodes “1” and “2” from the “Digit Barcodes” section in Appendix.
7. Scan the **Save** barcode from the “Save/Cancel Barcodes” section in Appendix.
8. Scan the **Exit Setup** barcode.

@SETUPE0

**** Exit Setup**

@SETUPE1

Enter Setup

Data Matrix Twin Code

Data Matrix twin code is 2 Data Matrix barcodes paralleled vertically or horizontally. They must both be either regular or inverse barcodes. They must have similar specifications and be placed closely together.

There are 3 options for reading Data Matrix twin codes:

- **Single Data Matrix Only:** Read either Data Matrix code.
- **Twin Data Matrix Only:** Read both Data Matrix codes. Transmission sequence: left (upper) Data Matrix code followed by right (lower) Data Matrix code.
- **Both Single & Twin:** Read both Data Matrix codes. If successful, transmit as twin Data Matrix only. Otherwise, try single Data Matrix only.

@DMCDOU0

**** Single Data Matrix Only**

@DMCDOU1

Twin Data Matrix Only

@DMCDOU2

Both Single & Twin

@SETUPE0

**** Exit Setup**

@SETUPE1

Enter Setup

Rectangular Barcode

Data Matrix has two formats:

Square barcodes having the same amount of modules in length and width: 10*10, 12*12.... 144*144.

Rectangular barcodes having different amounts of models in length and width: 6*16, 6*14...14*22.

@DMCREC1

**** Enable Rectangular Barcode**

@DMCREC0

Disable Rectangular Barcode

Character Encoding

@DMCENC0

**** Default Character Encoding**

@DMCENC1

UTF-8

@SETUPE0

**** Exit Setup**

@SETUPE1

Enter Setup

Chinese Sensible Code

Restore Factory Defaults

@CSCDEF

Restore the Factory Defaults of Chinese Sensible Code

Enable/Disable Chinese Sensible Code

@CSCENA1

Enable Chinese Sensible Code

@CSCENA0

**** Disable Chinese Sensible Code**

If the scanner fails to identify Chinese Sensible Code barcodes, you may first try this solution by scanning the **Enter Setup** barcode and then **Enable Chinese Sensible Code** barcode.

@SETUPE0

**** Exit Setup**

@SETUPE1

Enter Setup

Set Length Range for Chinese Sensible Code

The scanner can be configured to only decode Chinese Sensible Code barcodes with lengths that fall between (inclusive) the minimum and maximum lengths. To accomplish it, you need to set the minimum and maximum lengths.

@CSCMIN

Set the Minimum Length (Default: 1)

@CSCMAX

Set the Maximum Length (Default: 7827)

Minimum length is not allowed to be greater than maximum length. If you only want to read Chinese Sensible Code barcodes with a specific length, set both minimum and maximum lengths to be that desired length.

Set the scanner to decode Chinese Sensible Code barcodes containing between 8 and 12 characters:

1. Scan the **Enter Setup** barcode.
2. Scan the **Set the Minimum Length** barcode.
3. Scan the numeric barcode “8” from the “Digit Barcodes” section in Appendix.
4. Scan the **Save** barcode from the “Save/Cancel Barcodes” section in Appendix.
5. Scan the **Set the Maximum Length** barcode.
6. Scan the numeric barcodes “1” and “2” from the “Digit Barcodes” section in Appendix.
7. Scan the **Save** barcode from the “Save/Cancel Barcodes” section in Appendix.
8. Scan the **Exit Setup** barcode.

@SETUPE0

**** Exit Setup**

Chinese Sensible Twin Code

Chinese Sensible twin code is 2 Chinese Sensible barcodes paralleled vertically or horizontally. They must both be either regular or inverse barcodes. They must have similar specifications and be placed closely together.

There are 3 options for reading Chinese Sensible twin codes:

- ✧ **Single Chinese Sensible Code Only:** Read either Chinese Sensible code.
- ✧ **Twin Chinese Sensible Code Only:** Read both Chinese Sensible codes. Transmission sequence: left (upper) Chinese Sensible code followed by right (lower) Chinese Sensible code.
- ✧ **Both Single & Twin:** Read both Chinese Sensible codes. If successful, transmit as twin Chinese Sensible Code only. Otherwise, try single Chinese Sensible Code only.

@CSCDOU0
**** Single Chinese Sensible Code Only**

@CSCDOU1
Twin Chinese Sensible Code Only

@CSCDOU2
Both Single & Twin

@SETUPE1

Enter Setup

Chapter 7 Data Formatter

Introduction

You may use the Data Formatter to modify the scanner's output. For example, you can use the Data Formatter to insert characters at certain points in barcode data or to suppress/ replace/ send certain characters in barcode data as it is scanned.

Normally, when you scan a barcode, it gets outputted automatically; however, when you create a format, you must use a "send" command (see the "Send Commands" section in this chapter) within the format programming to output data. The maximum size of all data formats (up to four data formats) created is 496 characters. By default, the data formatter is disabled. Enable it when required. If you have changed data format settings, and wish to clear all formats and return to the factory defaults, scan the **Default Data Format** code below.

@DFMDEF

Default Data Format

Add a Data Format

Data format is used to edit barcode data only. You can program up to four data formats, i.e. Format_0, Format_1, Format_2 and Format_3. When you create a data format, you must specify the application scope of your data format (such as barcode type and data length) and include formatter commands. When scanned data does not match your data format requirements, you will hear the non-match error beep (if the non-match error beep is ON).

There are two methods to program a data format: Programming with barcodes and programming with serial commands.

Programming with Barcodes

The following explains how to program a data format by scanning the specific barcodes. Scanning any irrelevant barcode or failing to follow the setting procedure will result in programming failure. To find the alphanumeric barcodes needed to create a data format, see the "Digit Barcodes" section in Appendix.

Step 1: Scan the **Enter Setup** barcode.

@SETUPE0

**** Exit Setup**

Step 2: Scan the **Add Data Format** barcode.

@DFMADD

Add Data Format

Step 3: Select data format.

Scan a numeric barcode **0** or **1** or **2** or **3** to set this to Format_0 or Format_1 or Format_2 or Format_3.

Step 4: Select formatter command type.

Specify what type of formatter commands will be used. Scan a numeric barcode “6” to select formatter command type 6. (See the “Formatter Command Type 6” section in this chapter for more information)

Step 5: Set interface type

Scan **999** for any interface type.

Step 6: Set Symbology ID Number

Refer to the “Symbology ID Number” section in Appendix and find the ID number of the symbology to which you want to apply the data format. Scan three numeric barcodes for the symbology ID number. If you wish to create a data format for all symbologies, scan **999**.

Step 7: Set barcode data length

Specify what length of data will be acceptable for this symbology. Scan the four numeric barcodes that represent the data length. 9999 is a universal number, indicating all lengths. For example, 32 characters should be entered as 0032.

Step 8: Enter formatter command

Refer to the “Formatter Command Type 6” section in this chapter. Scan the alphanumeric barcodes that represent the command you need to edit data. For example, when a command is F141, you should scan F141.

Step 9: Scan the **Save** barcode from the “Save/Cancel Barcodes” section in Appendix to save your data format.

Example: Program format_0 using formatter command type 6, Code 128 containing 10 characters applicable, send all characters followed by “A”.

1. Scan the **Enter Setup** barcode	Enter the Setup mode
2. Scan the **Add Data Format** barcode	Add a data format
3. Scan the **0** barcode	Select format_0
4. Scan the **6** barcode	Select formatter command type 6
5. Scan the **9** barcode three times	All interface types applicable
6. Scan the barcodes **002**	Only Code 128 applicable
7. Scan the barcodes **0010**	Only a length of 10 characters applicable
8. Scan the alphanumeric barcodes **F141**	Send all characters followed by “A” (HEX: 41)
9. Scan the **Save** barcode	Save the data format

To streamline the programming process, you may as well generate a batch barcode by inputting the batch command (e.g. **@DFMADD069990020010F141;**) used to create a data format. See the **“Use Batch Barcode”** section in Chapter 9 to learn how to put a batch barcode into use.

Programming with Serial Commands

A data format can also be created by serial commands (HEX) sent from the host device. **All commands must be entered in uppercase letters**.

The syntax consists of the following elements:

Prefix: “~<SOH>0000” (HEX: **7E 01 30 30 30 30**), 6 characters.

Storage type: “@” (HEX: **40**) or “**#**” (HEX: **23**), 1 character. “@” means permanent setting which will not be lost by removing power from the scanner or rebooting it; “**#**” means temporary setting which will be lost by removing power from the scanner or rebooting it.

Add Data Format Command: “DFMADD” (HEX: **44 46 4D 41 44 44**), 6 characters.

Data format: “0” (HEX: **30**) or “1” (HEX: **31**) or “2” (HEX: **32**) or ”3” (HEX: **33**), 1 character. “0”, “1”, “2” and “3” represent Format_0, Format_1, Format_2 and Format_3 respectively.

Formatter command type: “6” (HEX: **36**), 1 character.

Interface type: “999” (HEX: **39 39 39**), 3 characters.

Symbology ID Number: The ID number of the symbology to which you want to apply the data format, 3 characters. 999 indicates all symbologies.

Data length: The length of data that will be acceptable for this symbology, 4 characters. 9999 indicates all lengths. For example, 32 characters should be entered as 0032.

Formatter commands: The command string used to edit data. For more information, see the “Formatter Command Type 6” section in this chapter.

Suffix: “;<ETX>” (HEX: **3B 03**), 2 characters.

Example: Program format_0 using formatter command type 6, Code 128 containing 10 characters applicable, send all characters followed by “A”.

Enter: **7E 01 30 30 30 30 40 44 46 4D 41 44 44 30 36 39 39 39 30 30 33 39 39 39 39 46 31 34 31 3B 03**

(~<SOH>0000@DFMADD069990020010F141;<ETX>)

Response: **02 01 30 30 30 30 40 44 46 4D 41 44 44 30 36 39 39 39 30 30 33 39 39 39 39 46 31 34 31 06 3B 03**

(<STX><SOH>0000@DFMADD069990020010F141<ACK>;<ETX>)

Enable/Disable Data Formatter

When Data Formatter is disabled, the barcode data is outputted to the host as read, including prefixes and suffixes.

@DFMENA0

**** Disable Data Formatter**

You may wish to require the data to conform to a data format you have created. The following settings can be applied to your data format:

Enable Data Formatter, Required, Keep Prefix/Suffix: Scanned data that meets your data format requirements is modified accordingly and gets outputted along with prefixes and suffixes (if prefix and suffix are enabled). Any data that does not match your data format requirements generates an error beep (if Non-Match Error Beep is turned ON) and the data in that barcode is not transmitted.

Enable Data Formatter, Required, Drop Prefix/Suffix: Scanned data that meets your data format requirements is modified accordingly and gets outputted without prefixes and suffixes (even if prefix and suffix are enabled). Any data that does not match your data format requirements generates an error beep (if Non-Match Error Beep is turned ON) and the data in that barcode is not transmitted.

Enable Data Formatter, Not Required, Keep Prefix/Suffix: Scanned data that meets your data format requirements is modified accordingly and gets outputted along with prefixes and suffixes (if prefix and suffix are enabled). Barcode data that does not match your data format requirements is transmitted as read along with prefixes and suffixes (if prefix and suffix are enabled).

Enable Data Formatter, Not Required, Drop Prefix/Suffix: Scanned data that meets your data format requirements is modified accordingly and gets outputted without prefixes and suffixes (even if prefix and suffix are enabled). Barcode data that does not match your data format requirements is transmitted as read along with prefixes and suffixes (if prefix and suffix are enabled).

@SETUPE1

Enter Setup

@DFMENA1

Enable Data Formatter, Required, Keep Prefix/Suffix

@DFMENA2

Enable Data Formatter, Required, Drop Prefix/Suffix

@DFMENA3

Enable Data Formatter, Not Required, Keep Prefix/Suffix

@DFMENA4

Enable Data Formatter, Not Required, Drop Prefix/Suffix

Non-Match Error Beep

If Non-Match Error Beep is turned ON, the scanner generates an error beep when a barcode is encountered that does not match your required data format.

@DFMTON0

Non-Match Error Beep Off

@DFMTON1

**** Non-Match Error Beep On**

@SETUPE0

**** Exit Setup**

@SETUPE1

Enter Setup

Data Format Selection

After enabling the Data Formatter, you can select a data format you want to use by scanning the appropriate barcode below.

@DFMUSE0

**** Format_0**

@DFMUSE1

Format_1

@DFMUSE2

Format_2

@DFMUSE3

Format_3

@SETUPE0

**** Exit Setup**

Change Data Format for a Single Scan

You can switch between data formats for a single scan. The next barcode is scanned using the data format selected here, then reverts to the format you have selected above.

For example, you may have set your scanner to use the data format you saved as Format_3. You can switch to Format_1 for a single trigger pull by scanning the **Single Scan – Format_1** barcode below. The next barcode that is scanned uses Format_1, then reverts back to Format_3.

Note: This setting will be lost by removing power from the scanner, or turning off/ rebooting the device.

@DFMSIN0
Single Scan – Format_0

@DFMSIN1
Single Scan – Format_1

@DFMSIN2
Single Scan – Format_2

@DFMSIN3
Single Scan – Format_3

@SETUPE1

Enter Setup

Clear Data Format

There are two methods to remove data format created from your scanner:

Delete one data format: Scan the **Clear One** barcode, a numeric barcode (0-3) and the **Save** barcode. For example, to delete Format_2, you should scan the **Clear One** barcode, the **2** barcode and the **Save** barcode

Delete all data formats: Scan the **Clear All** barcode.

@DFMCAL

Clear All

@DFMCLR

Clear One

Query Data Formats

You may scan the appropriate barcode below to get the information of data format(s) created by you or preset by manufacturer. For instance, if you have added Format_0 as per the example in the “Add a Data Format” section in this chapter, scanning the **Query Current Data Formats** barcode, you will get the result: **Data Format0:069990020010F141;**.

@DFMQCU

Query Current Data Formats

@DFMQFA

Query Preset Data Formats

@SETUPE0

**** Exit Setup**

Formatter Command Type 6

When working with the Data Formatter, a virtual cursor is moved along your input data string. The following commands are used to both move this cursor to different positions, and to select, replace, and insert data into the final output. For the hex value of ASCII characters involved in the commands, refer to the “ASCII Table” in Appendix.

Send Commands

F1 Send all characters

Syntax=F1xx (xx: The insert character’s hex value)
Include in the output message all of the characters from the input message, starting from current cursor position, followed by an insert character.

F2 Send a number of characters

Syntax=F2nnxx (nn: The numeric value (00-99) for the number of characters; xx: The insert character’s hex value)

Include in the output message a number of characters followed by an insert character. Start from the current cursor position and continue for “nn” characters or through the last character in the input message, followed by character “xx.”

F2 Example: Send a number of characters

1234567890ABCDEFGHIJ

Send the first 10 characters from the barcode above, followed by a carriage return.

Command string: **F2100D**

F2 is the “Send a number of characters” command

10 is the number of characters to send

0D is the hex value for a CR

The data is output as: **1234567890**
<CR>

F3 Send all characters up to a particular character

Syntax=F3ssxx (ss: The particular character's hex value; xx: The insert character's hex value)

Include in the output message all characters from the input message, starting with the character at the current cursor position and continuing to, but not including, the particular character "ss," followed by character "xx." The cursor is moved forward to the "ss" character.

F3 Example: Send all characters up to a particular character

1234567890ABCDEFGHIJ

Using the barcode above, send all characters up to but not including "D," followed by a carriage return.

Command string: **F3440D**

F3 is the "Send all characters up to a particular character" command

44 is the hex value for a "D"

0D is the hex value for a CR

The data is output as: **1234567890ABC**
<CR>

E9 Send all but the last characters

Syntax=E9nn (nn: The numeric value (00-99) for the number of characters that will not be sent at the end of the message)

Include in the output message all but the last "nn" characters, starting from the current cursor position. The cursor is moved forward to one position past the last input message character included.

F4 Insert a character multiple times

Syntax=F4xxnn (xx: The insert character's hex value; nn: The numeric value (00-99) for the number of times it should be sent)

Send "xx" character "nn" times in the output message, leaving the cursor in the current position.

E9 and F4 Example: Send all but the last characters, followed by 2 tabs

1234567890ABCDEFGHIJ

Send all characters except for the last 8 from the barcode above, followed by 2 tabs.

Command string: **E908F40902**

E9 is the “Send all but the last characters” command

08 is the number of characters at the end to ignore

F4 is the “Insert a character multiple times” command

09 is the hex value for a horizontal tab

02 is the number of time the tab character is sent

The data is output as: **1234567890AB<tab><tab>**

B3 Insert symbology name

Insert the name of the barcode’s symbology in the output message, without moving the cursor.

B4 Insert barcode length

Insert the barcode’s length in the output message, without moving the cursor. The length is expressed as a numeric string and does not include leading zeros.

B3 and B4 Example: Insert the symbology name and length

1234567890ABCDEFGHIJ

Send the symbology name and length before the barcode data from the barcode above. Break up these insertions with spaces. End with a carriage return.

Command string: **B3F42001B4F42001F10D**

B3 is the “Insert symbology name” command

F4 is the “Insert a character multiple times” command

20 is the hex value for a space

01 is the number of time the space character is sent

B4 is the “Insert barcode length” command

F4 is the “Insert a character multiple times” command

20 is the hex value for a space

01 is the number of time the space character is sent

F1 is the “Send all characters” command

0D is the hex value for a CR

The data is output as: **Code128 20 1234567890ABCDEFGHIJ**
<CR>

Move Commands

F5 Move the cursor forward a number of characters

Syntax=F5nn (nn: The numeric value (00-99) for the number of characters the cursor should be moved ahead)

Move the cursor ahead “nn” characters from current cursor position.

F5 Example: Move the cursor forward and send the data

1234567890ABCDEFGHIJ

Move the cursor forward 3 characters, then send the rest of the barcode data from the barcode above. End with a carriage return.

Command string: **F503F10D**

F5 is the “Move the cursor forward a number of characters” command

03 is the number of characters to move the cursor

F1 is the “Send all characters” command

0D is the hex value for a CR

The data is output as: **4567890ABCDEFGHIJ**
<CR>

F6 Move the cursor backward a number of characters

Syntax=F6nn (nn: The numeric value (00-99) for the number of characters the cursor should be moved back)

Move the cursor back “nn” characters from current cursor position.

F7 Move the cursor to the beginning

Syntax＝F7

Move the cursor to the first character in the input message.

EA Move the cursor to the end

Syntax＝EA

Move the cursor to the last character in the input message.

Search Commands

F8 Search forward for a character

Syntax＝F8xx (xx: The search character's hex value)

Search the input message forward for "xx" character from the current cursor position, leaving the cursor pointing to the "xx" character.

F8 Example: Send barcode data that starts after a particular character

1234567890ABCDEFGHIJ

Search for the letter "D" in barcodes and send all the data that follows, including the "D". Using the barcode above:

Command string: **F844F10D**

F8 is the "Search forward for a character" command

44 is the hex value for "D"

F1 is the "Send all characters" command

0D is the hex value for a CR

The data is output as: **DEFGHIJ**

<CR>

F9 Search backward for a character

Syntax＝F9xx(xx: The search character's hex value)

Search the input message backward for "xx" character from the current cursor position, leaving the cursor pointing to the "xx" character.

B0 Search forward for a string

Syntax=B0nnnnS (nnnn: The string length (up to 9999); S: The ASCII hex value of each character in the string)

Search forward for “S” string from the current cursor position, leaving cursor pointing to “S” string. For example, B0000454657374 will search forward for the first occurrence of the 4-character string “Test.”

B0 Example: Send barcode data that starts after a string of characters

1234567890ABCDEFGHIJ

Search for the letters “FGH” in barcodes and send all the data that follows, including “FGH.” Using the barcode above:

Command string: **B00003464748F10D**

B0 is the “Search forward for a string” command

0003 is the string length (3 characters)

46 is the hex value for “F”

47 is the hex value for “G”

48 is the hex value for “H”

F1 is the “Send all characters” command

0D is the hex value for a CR

The data is output as: **FGHIJ**
<CR>

B1 Search backward for a string

Syntax＝B1nnnnS (nnnn: The string length (up to 9999); S: The ASCII hex value of each character in the string)

Search backward for “S” string from the current cursor position, leaving cursor pointing to “S” string. For example, B1000454657374 will search backward for the first occurrence of the 4-character string “Test.”

E6 Search forward for a non-matching character

Syntax=E6xx (xx: The search character's hex value)

Search the input message forward for the first non-"xx" character from the current cursor position, leaving the cursor pointing to the non-"xx" character.

E6 Example: Remove zeros at the beginning of barcode data

This example shows a barcode that has been zero filled. You may want to ignore the zeros and send all the data that follows. E6 searches forward for the first character that is not zero, then sends all the data after, followed by a carriage return. Using the barcode above:

Command string: **E630F10D**

E6 is the "Search forward for a non-matching character" command

30 is the hex value for 0

F1 is the "Send all characters" command

0D is the hex value for a CR

The data is output as: **37692**

<CR>

E7 Search backward for a non-matching character

Syntax＝E7xx(xx: The search character's hex value)

Search the input message backward for the first non-"xx" character from the current cursor position, leaving the cursor pointing to the non-"xx" character.

Miscellaneous Commands

FB Suppress characters

Syntax＝FBnnxxyy..zz (nn: The numeric value (00-15) for the number of suppressed characters; xxyy..zz: The hex value of the characters to be suppressed)

Suppress all occurrences of up to 15 different characters, starting at the current cursor position, as the cursor is advanced by other commands.

FB Example: Remove spaces in barcode data

345 678 90

This example shows a barcode that has spaces in the data. You may want to remove the spaces before sending the data. Using the barcode above:

Command string: **FB0120F10D**

FB is the “Suppress characters” command

01 is the number of the characters to be suppressed

20 is the hex value for a space

F1 is the “Send all characters” command

0D is the hex value for a CR

The data is output as: **34567890**

<CR>

E4 Replace characters

Syntax＝E4nnxx_1xx_2yy_1yy_2…zz_1zz_2(nn: The total count of the number of characters (characters to be replaced plus replacement characters; xx_1: The characters to be replaced, xx_2: The replacement characters, continuing through zz_1 and zz_2)

Replace up to 15 characters in the output message, without moving the cursor.

E4 Example: Replace zeros with CRs in barcode data

1234056780ABC

If the barcode has characters that the host application does not want included, you can use the E4 command to replace those characters with something else. In this example, you will replace the zeros in the barcode above with carriage returns.

Command string: **E402300DF10D**

E4 is the “Replace characters” command

02 is the total count of characters to be replaced, plus the replacement characters (0 is replaced by CR, so total characters=2)

30 is the hex value for 0

0D is the hex value for a CR (the character that will replace the 0)

F1 is the “Send all characters” command

0D is the hex value for a CR

The data is output as: **1234**
5678
ABC
<CR>

BA Replace a string with another

Syntax＝BAnn$NN_1SS_1NN_2SS_2$

nn: The count of replacements to be made, if nn=00 or nn>=the number of occurrences of a string to be replaced, then replace all occurrences of that string.

NN_1: The length of the string to be replaced, NN_1>0.

SS_1: The ASCII hex value of each character in the string to be replaced.

NN_2: The length of replacement string, NN_2>=0. To replace string "SS_1" with NUL (i.e. delete string "SS_1"), you should set NN_2 to 00 and leave out SS_2.

SS_2: The ASCII hex value of each character in the replacement string.

From the current cursor position, search forward for the occurrence of "SS_1" string (of length "NN_1") and replace the string with "SS_2" string (of length "NN_2") in the output message until every "SS_1" stringis replaced or the count of replacements made reaches "nn" times, without moving the cursor.

BA Example: Replace "23"s with "ABC"s in barcode data

cd123abc23bc12ab232

If the barcode has a string of characters that the host application does not want included, you can use the BA command to replace the string with something else. In this example, you will replace the "23"s in the barcode above with "ABC"s.

Command string: **BA0002323303414243F100**

BA is the "Replace a string with another" command

00 is the count of replacements to be made, 00 means to replace all occurrences of that string

02 is the length of the string to be replaced

32 is the hex value for 2 (character in the string to be replaced)

33 is the hex value for 3 (character in the string to be replaced)

03 is the length of the replacement string

41 is the hex value for A (character in the replacement string)

42 is the hex value for B (character in the replacement string)

43 is the hex value for C (character in the replacement string)

F1 is the “Send all characters” command

00 is the hex value for a NUL

The data is output as: **cd1ABCabcABCbc12abABC2**

BA Example: Remove only the first occurrence of “23”s in barcode data

If the barcode has a string of characters that the host application wants removed, you can use the BA command to replace the string with NUL. In this example, you will remove the first occurrence of “23” in the barcode above.

Command string: **BA0102323300F100**

BA is the “Replace a string with another” command

01 is the count of replacements to be made

02 is the length of the string to be replaced

32 is the hex value for 2 (character in the string to be replaced)

33 is the hex value for 3 (character in the string to be replaced)

00 is the length of the replacement string, 00 means to replace the string to be replaced with NUL

F1 is the “Send all characters” command

00 is the hex value for a NUL

The data is output as: **cd1abc23bc12ab232**

EF Insert a delay

Syntax＝EFnnnn (nnnn: The delay in 5ms increments, up to 9999)

Inserts a delay of up to 49,995 milliseconds (in multiples of 5), starting from the current cursor position. This command can only be used with USB HID Keyboard.

EF Example: Insert a delay of 1s between the 5th and 6th character

Send the first 5 characters in a barcode, wait for 1s, then send the rest of the barcode data.

Command string: **F20500EF0200E900**

F2 is the “Send a number of characters” command

05 is the number of characters to send

00 is the hex value for a Null character

EF is the “Insert a delay” command

0200 is the delay value (5msX200=1000ms=1s)

E9 is the “Send all but the last characters” command

00 is the number of characters that will not be sent at the end of the message

B5 Insert key strokes

Syntax=B5nnssxx (nn: The number of keys pressed (without key modifiers); ss: the key modifier from the table below; xx: the key number from the “Unicode Key Maps” in Appendix.)

Insert a key stroke or combination of key strokes. Key strokes are dependent on your keyboard (see the “Unicode Key Maps” in Appendix). This command can only be used with USB HID Keyboard.

Key Modifiers	
No Key Modifier	00
Shift Left	01
Shift Right	02
Alt Left	04
Alt Right	08
Control Left	10
Control Right	20

For example, B501001F inserts an “a” on a U.S. style keyboard. B5 = the command, 01 = number of keys pressed (without the key modifier), 00 is No Key Modifier, and 1F is the “a” key. If an “A” were to be inserted, B501011F or B501021F would be entered.

If there are two keystrokes, the syntax would change from Syntax=B5nnssxx for one keystroke to Syntax=B5nnssxxssxx. An example that would insert “aA” is as follows: B502001F011F.

Note: Key modifiers can be added together when needed. Example: Shift Left + Alt Left + Control Left =15.

Chapter 8 Prefix & Suffix

Introduction

A 1D barcode could contain digits, letters, symbols, etc. A 2D barcode could contain more data, such as Chinese characters and other multi-byte characters. However, in real applications, they do not and should not have all information we need, such as barcode type, data acquisition time and delimiter, in order to keep the barcodes short and flexible.

Preffix and suffix are how to fulfill the needs mentioned above. They can be added, removed and modified while the original barcode data remains intact.

Barcode processing procedure:

1. Edit data with Data Formatter
2. Append prefix/suffix
3. Pack data
4. Append terminating character

@SETUPE1

Enter Setup

Global Settings

Enable/Disable All Prefixes/Suffixes

Disable All Prefixes/Suffixes: Transmit barcode data with no prefix/suffix.

Enable All Prefixes/Suffixes: Allow to append Code ID prefix, AIM ID prefix, custom prefix/suffix and terminating character to the barcode data before the transmission.

@APSENA0

**** Disable All Prefixes/Suffixes**

@APSENA1

Enable All Prefixes/Suffixes

Prefix Sequence

@PRESEQ0

Code ID+ Custom +AIM ID

@PRESEQ1

**** Custom + Code ID + AIM ID**

@SETUPE0

**** Exit Setup**

@SETUPE1

Enter Setup

Custom Prefix

Enable/Disable Custom Prefix

If custom prefix is enabled, you are allowed to append to the data a user-defined prefix that cannot exceed 10 characters. For example, if the custom prefix is “AB” and the barcode data is “123”, the Host will receive “AB123”.

@CPRENA0

**** Disable Custom Prefix**

@CPRENA1

Enable Custom Prefix

Set Custom Prefix

To set a custom prefix, scan the **Set Custom Prefix** barcode then the numeric barcodes corresponding to the hexadecimal value of a desired prefix then the **Save** barcode.

Note: A custom prefix cannot exceed 11 characters.

@CPRSET

Set Custom Prefix

Example

Set the custom prefix to “CODE” (HEX: 0x43/0x4F/0x44/0x45):

1. Scan the **Enter Setup** barcode.
2. Scan the **Set Custom Prefix** barcode.
3. Scan the numeric barcodes “4”, “3”, “4”, “F”, “4”, “4”, “4” and “5” from the “Digit Barcodes” section in Appendix.
4. Scan the **Save** barcode from the “Save/Cancel Barcodes” section in Appendix.
5. Scan the **Enable Custom Prefix** barcode.
6. Scan the **Exit Setup** barcode.

@SETUPE0

**** Exit Setup**

@SETUPE1

Enter Setup

AIM ID Prefix

AIM (Automatic Identification Manufacturers) ID defines symbology identifier (For the details, see the “AIM ID Table**”** section in Appendix). If AIM ID prefix is enabled, the scanner will add the symbology identifier before the scanned data after decoding.

@AIDENA0

**** Disable AIM ID Prefix**

@AIDENA1

Enable AIM ID Prefix

AIM ID is not user programmable.

@SETUPE0

**** Exit Setup**

@SETUPE1

Enter Setup

Code ID Prefix

Code ID can also be used to identify barcode type. Unlike AIM ID, Code ID is user programmable. Code ID can only consist of one or two English letters.

@CIDENA0

**** Disable Code ID Prefix**

@CIDENA1

Enable Code ID Prefix

Restore All Default Code IDs

For the information of default Code IDs, see the “Code ID Table” section in Appendix.

@CIDDEF

Restore All Default Code IDs

Modify Code ID

See the examples below to learn how to modify a Code ID and restore the default Code IDs of all symbologies.

@SETUPE0

**** Exit Setup**

Modify PDF417 Code ID to be "p" (HEX: 0x70):

1. Scan the **Enter Setup** barcode.
2. Scan the **Modify PDF417 Code ID** barcode.
3. Scan the numeric barcodes "7" and "0" from the "Digit Barcodes" section in Appendix.
4. Scan the **Save** barcode from the "Save/Cancel Barcodes" section in Appendix.
5. Scan the **Exit Setup** barcode.

Restore the default Code IDs of all symbologies:

1. Scan the **Enter Setup** barcode.
2. Scan the **Restore All Default Code IDs** barcode**.**
3. Scan the **Exit Setup** barcode.

@SETUPE1

Enter Setup

1D symbologies:

@CID002

Modify Code 128 Code ID

@CID003

Modify GS1-128 Code ID

@CID004

Modify EAN-8 Code ID

@CID005

Modify EAN-13 Code ID

@CID006

Modify UPC-E Code ID

@CID007

Modify UPC-A Code ID

@CID008

Modify Interleaved 2 of 5 Code ID

@SETUPE0

**** Exit Setup**

@SETUPE1

Enter Setup

@CID009

Modify ITF-14 Code ID

@CID010

Modify ITF-6 Code ID

@CID011

Modify Matrix 2 of 5 Code ID

@CID013

Modify Code 39 Code ID

@CID015

Modify Codabar Code ID

@CID017

Modify Code 93 Code ID

@CID020

Modify AIM 128 Code ID

@SETUPE0

**** Exit Setup**

@SETUPE1

Enter Setup

@CID023

Modify ISSN Code ID

@CID024

Modify ISBN Code ID

@CID025

Modify Industrial 25 Code ID

@CID026

Modify Standard 25 Code ID

@CID027

Modify Plessey Code ID

@CID028

Modify Code 11 Code ID

@CID029

Modify MSI-Plessy Code ID

@CID031

Modify GS1 Databar Code ID

@SETUPE0

**** Exit Setup**

@SETUPE1

Enter Setup

2D symbologies:

@CID032

Modify PDF417 Code ID

@CID033

Modify QR Code ID

@CID035

Modify Data Matrix Code ID

@CID039

Modify Chinese Sensible Code ID

@SETUPE0

**** Exit Setup**

@SETUPE1

Enter Setup

Custom Suffix

Enable/Disable Custom Suffix

If custom suffix is enabled, you are allowed to append to the data a user-defined suffix that cannot exceed 10 characters. For example, if the custom suffix is “AB” and the barcode data is “123”, the Host will receive “123AB”.

@CSUENA0

**** Disable Custom Suffix**

@CSUENA1

Enable Custom Suffix

Set Custom Suffix

To set a custom suffix, scan the **Set Custom Suffix** barcode then the numeric barcodes corresponding to the hexadecimal value of a desired suffix then the **Save** barcode.

Note: A custom suffix cannot exceed 11 characters.

@CSUSET

Set Custom Suffix

Example

Set the custom suffix to “CODE” (HEX: 0x43/0x4F/0x44/0x45):

1. Scan the **Enter Setup** barcode.
2. Scan the **Set Custom Suffix** barcode.
3. Scan the numeric barcodes “4”, “3”, “4”, “F”, “4”, “4”, “4” and “5” from the “Digit Barcodes” section in Appendix.
4. Scan the **Save** barcode from the “Save/Cancel Barcodes” section in Appendix.
5. Scan the **Enable Custom Suffix** barcode.
6. Scan the **Exit Setup** barcode.

@SETUPE0

**** Exit Setup**

Data Packing

Introduction

Data packing is designed for a specific group of users who want to have the data packed before transmission. Data packing influences data format, so it is advised to disable this feature when it is not required.

Data Packing Options

Disable Data Packing: Transmit decoded data in raw format (unpacketed).

Enable Data Packing, Format 1: Transmit decoded data with the packet format 1 defined below.

Packet format 1: [STX + ATTR + LEN] + [AL_TYPE + DATA] + [LRC]

STX: 0x02

ATTR: 0x00

LEN: Barcode data length is expressed in 2 bytes ranging from 0x0000 (0) to 0xFFFF (65535).

AL_TYPE: 0x36

DATA: Raw barcode data.

LRC: Check digit.
LRC calculation algorithm: computation sequence: 0xFF+LEN+AL_TYPE+DATA; computation method is XOR, byte by byte.

Enable Data Packing, Format 2: Transmit decoded data with the packet format 2 defined below.

Packet format 2: [STX + ATTR + LEN] + [AL_TYPE] + [Symbology_ID + DATA] + [LRC]

STX: 0x02

ATTR: 0x00

LEN: Barcode data length is expressed in 2 bytes ranging from 0x0000 (0) to 0xFFFF (65535).

AL_TYPE: 0x3B

Symbology_ID: The ID number of symbology, 1 byte.

DATA: Raw barcode data.

LRC: Check digit.
LRC calculation algorithm: computation sequence: 0xFF+LEN+AL_TYPE+Symbology_ID+DATA; computation method is XOR, byte by byte.

@SETUPE1

Enter Setup

@PACKAG0

**** Disable Data Packing**

@PACKAG1

Enable Data Packing, Format 1

@PACKAG2

Enable Data Packing, Format 2

@SETUPE0

**** Exit Setup**

@SETUPE1

Enter Setup

Terminating Character Suffix

Enable/Disable Terminating Character Suffix

A terminating character such as carriage return (CR) or carriage return/line feed pair (CRLF) can only be used to mark the end of data, which means nothing can be added after it.

@TSUENA0

Disable Terminating Character Suffix

@TSUENA1

**** Enable Terminating Character Suffix**

Set Terminating Character Suffix

To set a terminating character suffix, scan the **Set Terminating Character Suffix** barcode then the numeric barcodes corresponding to the hexadecimal value of a desired terminating character then the **Save** barcode.

Note: A terminating character suffix cannot exceed 7 characters.

@TSUSET

Set Terminating Character Suffix

@TSUSET0D

Set Terminating Character to CR (0x0D)

@TSUSET0D0A

**** Set Terminating Character to CRLF (0x0D,0x0A)**

@SETUPE0

**** Exit Setup**

Set the terminating character suffix to 0x0A:

1. Scan the **Enter Setup** barcode.
2. Scan the **Set Terminating Character Suffix** barcode.
3. Scan the numeric barcodes “0” and “A” from the “Digit Barcodes” section in Appendix.
4. Scan the **Save** barcode from the “Save/Cancel Barcodes” section in Appendix.
5. Scan the **Enable Terminating Character Suffix** barcode.
6. Scan the **Exit Setup** barcode.

@SETUPE1

Enter Setup

Chapter 9 Batch Programming

Introduction

Batch programming enables users to integrate a batch of commands into a single batch barcode.

Listed below are batch programming rules:

1. Command format: Command + Parameter Value.

2. Each command is terminated by a semicolon (;). Note that there is no space between a command and its terminator semicolon.

3. Use the barcode generator software to generate a 2D batch barcode.

Example: Create a batch barcode for **Normal Illumination**, **Sense Mode**, **Decode Session Timeout** = 2s, **Disable Interleaved 2 of 5**:

1. Input the commands:

   @ILLSCN1;SCNMOD2;ORTSET2000;I25ENA0;

2. Generate a batch barcode.

When setting up a scanner with the above configuration, scan the **Enable Batch Barcode** barcode and then the batch barcode generated.

@BATCHS

Enable Batch Barcode

@SETUPE0

**** Exit Setup**

Create a Batch Command

A batch command may contain a number of individual commands each of which is terminated by a semicolon (;).

For more information, refer to the “Use of Programming Command” section in Chapter 3.

Create a Batch Barcode

Batch barcodes can be produced in the format of PDF417, QR Code or Data Matrix.

Example: Create a batch barcode for **Normal Illumination**, **Sense Mode**, **Decode Session Timeout** = 2s, **Disable Interleaved 2 of 5**:

1. Input the following commands:

   @ILLSCN1;SCNMOD2;ORTSET2000;I25ENA0;

2. Generate a PDF417 batch barcode.

Use Batch Barcode

To put a batch barcode into use, scan the following barcodes. (Use the example above.)

@SETUPE1
Enter Setup

@BATCHS
Enable Batch Barcode

Batch Barcode

@SETUPE0
Exit Setup

Appendix

Digit Barcodes

0~9

@DIGIT0

0

@DIGIT1

1

@DIGIT2

2

@DIGIT3

3

@DIGIT4

4

@DIGIT5

5

@DIGIT6

6

@DIGIT7

7

@DIGIT8

8

@DIGIT9

9

A~F

@DIGITA

A

@DIGITB

B

@DIGITC

C

@DIGITD

D

@DIGITE

E

@DIGITF

F

Save/Cancel Barcodes

After reading numeric barcode(s), you need to scan the **Save** barcode to save the data. If you scan the wrong digit(s), you can either scan the **Cancel** barcode and then start the configuration all over again, or scan the **Delete the Last Digit** barcode and then the correct digit, or scan the **Delete All Digits** barcode and then the digits you want.

For instance, after reading the **Maximum Length** barcode and numeric barcodes “1”, “2” and “3”, you scan:

- ✧ **Delete the Last Digit:** The last digit “3” will be removed.
- ✧ **Delete All Digits:** All digits “123” will be removed.
- ✧ **Cancel:** The maximum length configuration will be cancelled. And the scanner is still in the setup mode.

@DIGSAV

Save

@DIGCAN

Cancel

@DIGDEL

Delete the Last Digit

@DIGDAL

Delete All Digits

Factory Defaults Table

Parameter	Factory Default	Remark
System Settings		
Barcode Programming	Disabled (Exit Setup)	
Programming Barcode Data	Do not transmit	
Illumination	Normal	
Power On Beep	On	
Good Read Beep	On	
Good Read Beep Duration	100ms	
Good Read Beep Frequency	Low (2700Hz)	
Good Read Beep Volume	Loud	
Scan Mode	Sense Mode	
Decode Session Timeout	3,000ms	100-3,600,000ms; 0: Infinite
Image Stabilization Timeout (Sense Mode)	100ms	
Timeout between Decodes (Continuous Mode)	200ms	0-65,535ms
Timeout between Decodes (Same Barcode)	Disabled	
	1,500ms	0-65,535ms
Sensitivity	High Sensitivity	Level 1-16
Scanning Preference	Normal Motion Tolerance	
Read Barcode	On	
Decode Area	Whole Area Decoding	
Specify Decoding Area	40% top, 60% bottom, 40% left, 60% right	
Image Flipping	Do Not Flip	
Bad Read Message	Off	
	none	Up to 7 characters
Default Interface	USB HID Keyboard	
RS-232 Interface		
Baud Rate	115200	
Parity Check	None	
Data Bits	8	
Stop Bits	1	
Hardware Auto Flow Control	No Flow Control	
USB Interface		
USB Country Keyboard	US keyboard	USB HID Keyboard

Beep on Unknown Character	Off	USB HID Keyboard
Emulate ALT+Keypad	Off	USB HID Keyboard
Emulate Keypad with Leading Zero	On	USB HID Keyboard
Code Page	Code Page 1252 (West European Latin)	USB HID Keyboard
Function Key Mapping	Disable	USB HID Keyboard
Inter-Keystroke Delay	10ms	USB HID Keyboard
Convert Case	No Case Conversion	USB HID Keyboard
Emulate Numeric Keypad	Off	USB HID Keyboard
Polling Rate	1ms	USB HID Keyboard
Caps Lock	Off	USB HID Keyboard
Symbologies		
Video Reverse	Off	
Code 128		
Code 128	Enabled	
Maximum Length	127	
Minimum Length	1	
Check Character	Do not transmit	
EAN-8		
EAN-8	Enabled	
Check Character	Transmit	
2-Digit Add-On Code	Disabled	
5-Digit Add-On Code	Disabled	
Add-On Code	Not Required	
Convert EAN-8 to EAN-13	Disabled	
EAN-13		
EAN-13	Enabled	
Check Character	Transmit	
2-Digit Add-On Code	Disabled	
5-Digit Add-On Code	Disabled	
Add-On Code	Not Required	
EAN-13 Beginning with 290 Add-On Code Required	Do Not Require Add-On Code	
EAN-13 Beginning with 378/379 Add-On Code Required	Do Not Require Add-On Code	
EAN-13 Beginning with 414/419 Add-On Code Required	Do Not Require Add-On Code	
EAN-13 Beginning with 434/439 Add-On Code Required	Do Not Require Add-On Code	
EAN-13 Beginning with 977 Add-On Code Required	Do Not Require Add-On Code	
EAN-13 Beginning with 978 Add-On Code Required	Do Not Require Add-On Code	

EAN-13 Beginning with 979 Add-On Code Required	Do Not Require Add-On Code	
UPC-E		
UPC-E	Enabled	
Check Character	Transmit	
2-Digit Add-On Code	Disabled	
5-Digit Add-On Code	Disabled	
Add-On Code	Not required	
System Character	Transmit	
Convert UPC-E to UPC-A	Disabled	
UPC-A		
UPC-A	Enabled	
Check Character	Transmit	
2-Digit Add-On Code	Disabled	
5-Digit Add-On Code	Disabled	
Add-On Code	Not required	
Transmit Preamble Character	System Character	
Interleaved 2 of 5		
Interleaved 2 of 5	Enabled	
Maximum Length	100	
Minimum Length	6	No less than 4
Check Character Verification	Disable	
Febraban		
Febraban	Disabled	
Transmit Delay per Character	Disabled	
	70ms	
Transmit Delay per 12 Characters	Disabled	
	500ms	
ITF-14		
ITF-14	Enabled	
Check Character	Do not transmit	
ITF-6		
ITF-6	Disabled	
Matrix 2 of 5		
Matrix 2 of 5	Disabled	
Maximum Length	127	
Minimum Length	6	No less than 4

Check Character Verification	Do Not Transmit Check Character After Verification	
Code 39		
Code 39	Enabled	
Maximum Length	127	
Minimum Length	1	
Check Character Verification	Disabled	
Start/Stop Character	Do not transmit	
Code 39 Full ASCII	Enabled	
Code 32 Pharmaceutical (PARAF)	Disabled	
Code 32 Prefix	Disabled	
Code 32 Start/Stop Character	Do not transmit	
Code 32 Check Character	Do not transmit	
Codabar		
Codabar	Enabled	
Maximum Length	127	
Minimum Length	1	
Check Character Verification	Disabled	
Start/Stop Character	Do not transmit	
	ABCD/ABCD	
Code 93		
Code 93	Enabled	
Maximum Length	127	
Minimum Length	3	No less than 1
Check Character Verification	Do Not Transmit Check Character After Verification	
GS1-128 (UCC/EAN-128)		
GS1-128	Enabled	
Maximum Length	127	
Minimum Length	1	
Check Character	Do not transmit	
GS1 Databar		
GS1 Databar	Enabled	
Application Identifier “01”	Transmit	
Code 11		
Code 11	Enabled	

Maximum Length	127	
Minimum Length	2	
Check Character Verification	One Check Character, MOD11	
Check Character	Do not transmit	
ISBN		
ISBN	Disabled	
Set ISBN Format	ISBN-13	
2-Digit Add-On Code	Disabled	
5-Digit Add-On Code	Disabled	
Add-On Code	Not required	
ISSN		
ISSN	Disabled	
2-Digit Add-On Code	Disabled	
5-Digit Add-On Code	Disabled	
Add-On Code	Not required	
Industrial 25		
Industrial 25	Enabled	
Maximum Length	127	
Minimum Length	6	No less than 4
Check Character Verification	Disabled	
Standard 25		
Standard 25	Enabled	
Maximum Length	127	
Minimum Length	6	No less than 4
Check Character Verification	Disabled	
Plessey		
Plessey	Enabled	
Maximum Length	127	
Minimum Length	1	
Check Character Verification	Do Not Transmit Check Character After Verification	
MSI-Plessey		
MSI-Plessey	Enabled	
Maximum Length	127	
Minimum Length	2	
Check Character Verification	One Check Character, MOD10	

Check Character	Transmit	
AIM 128		
AIM 128	Enabled	
Maximum Length	127	
Minimum Length	1	
Check Character	Do not transmit	
PDF417		
PDF417	Enabled	
Maximum Length	2710	
Minimum Length	1	
PDF417 Twin Code	Single PDF417 Only	
Character Encoding	Default Character Encoding	
QR Code		
QR Code	Enabled	
Maximum Length	7089	
Minimum Length	1	
QR Twin Code	Single QR Only	
Character Encoding	Default Character Encoding	
Micro QR	Enabled	
Data Matrix		
Data Matrix	Enabled	
Maximum Length	3116	
Minimum Length	1	
Data Matrix Twin Code	Single Data Matrix Only	
Rectangular Barcode	Enabled	
Character Encoding	Default Character Encoding	
Chinese Sensible Code		
Chinese Sensible Code	Disabled	
Maximum Length	7827	
Minimum Length	1	
Chinese Sensible Twin Code	Single Chinese Sensible Code Only	
Data Formatter		
Data Formatter	Disabled	
Non-Match Error Beep	On	
Data Format Selection	Format_0	

Prefix & Suffix		
All Prefixes/Suffixes	Disabled	
Prefix Sequence	Custom +Code ID+ AIM ID	
Custom Prefix	Disabled	Up to 11 characters
AIM ID Prefix	Disabled	
Code ID Prefix	Disabled	
Custom Suffix	Disabled	Up to 11 characters
Data Packing	Disable Data Packing	
Terminating Character Suffix	Enabled CRLF (0x0D0A)	Up to 7 characters

AIM ID Table

Symbology	AIM ID	Possible AIM ID Modifiers (m)
Code128	]C0	
GS1-128 (UCC/EAN-128)	]C1	
EAN-8	]E4	
EAN-8 with 2-Digit Addon	]E4…]E1…	
EAN-8 with 5-Digit Addon	]E4…]E2…	
EAN-13	]E0	
EAN-13 with Addon	]E3	
UPC-E	]E0	
UPC-E with Addon	]E3	
UPC-A	]E0	
UPC-A with Addon	]E3	
Interleaved 2 of 5	]Im	0, 1, 3
ITF-14	]Im	1, 3
ITF-6	]Im	1, 3
Matrix 2 of 5	]Xm	0, 1, 3, 4
Code 39	]Am	0, 1, 3, 4, 5, 7
Codabar	]Fm	0, 2, 4
Code 93	]G0	
AIM 128	]C2	
ISSN	]X5	
ISBN	]X4	
Industrial 25	]S0	
Standard 25	]Rm	0, 8, 9
Plessey	]P0	
Code 11	]Hm	0, 1, 3, 9
MSI Plessey	]Mm	0, 1, 8, 9
GS1 Databar （RSS）	]e0	
PDF417	]L0	
QR Code	]Qm	0-6
Data Matrix	]dm	0-6
Chinese Sensible Code	]X0	

Note: “m” represents the AIM modifier character. Refer to ISO/IEC 15424:2008 Information technology – Automatic identification and data capture techniques – Data Carrier Identifiers (including Symbology Identifiers) for AIM modifier character details.

Code ID Table

Symbology	Code ID
Code128	j
GS1-128 (UCC/EAN-128)	j
EAN-8	d
EAN-13	d
UPC-E	c
UPC-A	c
Interleaved 2 of 5, Febraban	e
ITF-14	e
ITF-6	e
Matrix 2 of 5	v
Code 39, Code 32	b
Codabar	a
Code 93	i
AIM 128	f
ISSN	n
ISBN	B
Industrial 25	D
Standard 25	s
Plessey	p
Code 11	H
MSI Plessey	m
GS1 Databar (RSS)	R
PDF417	r
QR Code	Q
Data Matrix	u
Chinese Sensible Code	h

Symbology ID Number

Symbology	ID Number
Code 128	002
GS1-128 (UCC/EAN-128)	003
EAN-8	004
EAN-13	005
UPC-E	006
UPC-A	007
Interleaved 2 of 5, Febraban	008
ITF-14	009
ITF-6	010
Matrix 2 of 5	011
Code 39, Code 32	013
Codabar	015
Code 93	017
AIM 128	020
ISSN	023
ISBN	024
Industrial 25	025
Standard 25	026
Plessey	027
Code11	028
MSI-Plessey	029
GS1 Databar (RSS)	031
PDF417	032
QR Code	033
Data Matrix	035
Chinese Sensible Code	039

ASCII Table

Hex	Dec	Char
00	0	NUL (Null char.)
01	1	SOH (Start of Header)
02	2	STX (Start of Text)
03	3	ETX (End of Text)
04	4	EOT (End of Transmission)
05	5	ENQ (Enquiry)
06	6	ACK (Acknowledgment)
07	7	BEL (Bell)
08	8	BS (Backspace)
09	9	HT (Horizontal Tab)
0a	10	LF (Line Feed)
0b	11	VT (Vertical Tab)
0c	12	FF (Form Feed)
0d	13	CR (Carriage Return)
0e	14	SO (Shift Out)
0f	15	SI (Shift In)
10	16	DLE (Data Link Escape)
11	17	DC1 (XON) (Device Control 1)
12	18	DC2 (Device Control 2)
13	19	DC3 (XOFF) (Device Control 3)
14	20	DC4 (Device Control 4)
15	21	NAK (Negative Acknowledgment)
16	22	SYN (Synchronous Idle)
17	23	ETB (End of Trans. Block)
18	24	CAN (Cancel)
19	25	EM (End of Medium)
1a	26	SUB (Substitute)
1b	27	ESC (Escape)
1c	28	FS (File Separator)
1d	29	GS (Group Separator)

Hex	Dec	Char
1e	30	RS (Request to Send)
1f	31	US (Unit Separator)
20	32	SP (Space)
21	33	! (Exclamation Mark)
22	34	" (Double Quote)
23	35	# (Number Sign)
24	36	$ (Dollar Sign)
25	37	% (Percent)
26	38	& (Ampersand)
27	39	` (Single Quote)
28	40	((Left/ Opening Parenthesis)
29	41	) (Right/ Closing Parenthesis)
2a	42	* (Asterisk)
2b	43	+ (Plus)
2c	44	, (Comma)
2d	45	- (Minus/ Dash)
2e	46	. (Dot)
2f	47	/ (Forward Slash)
30	48	0
31	49	1
32	50	2
33	51	3
34	52	4
35	53	5
36	54	6
37	55	7
38	56	8
39	57	9
3a	58	: (Colon)
3b	59	; (Semi-colon)
3c	60	< (Less Than)
3d	61	= (Equal Sign)

Hex	Dec	Char
3e	62	> (Greater Than)
3f	63	? (Question Mark)
40	64	@ (AT Symbol)
41	65	A
42	66	B
43	67	C
44	68	D
45	69	E
46	70	F
47	71	G
48	72	H
49	73	I
4a	74	J
4b	75	K
4c	76	L
4d	77	M
4e	78	N
4f	79	O
50	80	P
51	81	Q
52	82	R
53	83	S
54	84	T
55	85	U
56	86	V
57	87	W
58	88	X
59	89	Y
5a	90	Z
5b	91	[(Left/ Opening Bracket)
5c	92	\ (Back Slash)
5d	93	] (Right/ Closing Bracket)

Hex	Dec	Char
5e	94	^ (Caret/ Circumflex)
5f	95	_ (Underscore)
60	96	' (Grave Accent)
61	97	a
62	98	b
63	99	c
64	100	d
65	101	e
66	102	f
67	103	g
68	104	h
69	105	i
6a	106	j
6b	107	k
6c	108	l
6d	109	m
6e	110	n
6f	111	o
70	112	p
71	113	q
72	114	r
73	115	s
74	116	t
75	117	u
76	118	v
77	119	w
78	120	x
79	121	y
7a	122	z
7b	123	{ (Left/ Opening Brace)
7c	124	| (Vertical Bar)
7d	125	} (Right/ Closing Brace)
7e	126	~ (Tilde)
7f	127	DEL (Delete)

Unicode Key Maps

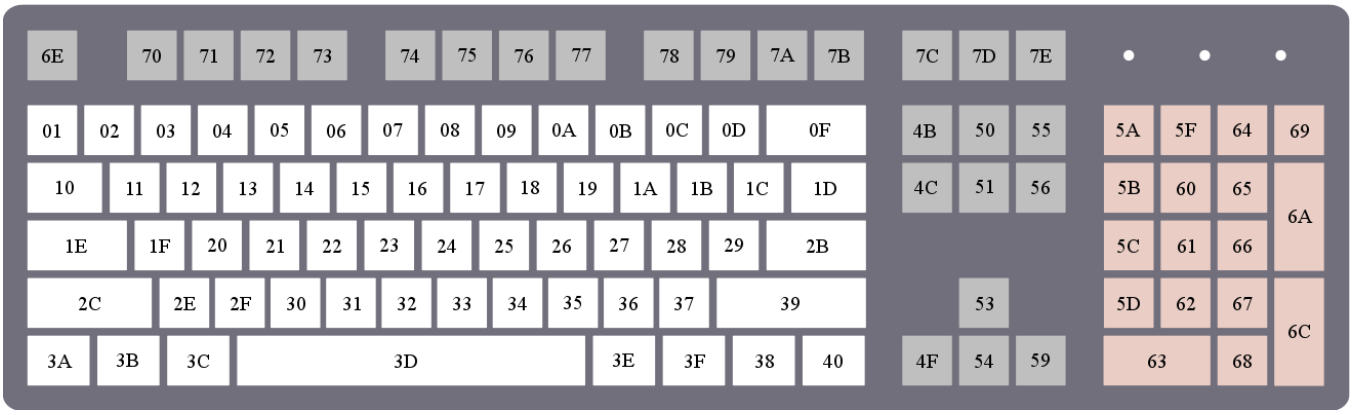

104 Key U.S. Style Keyboard

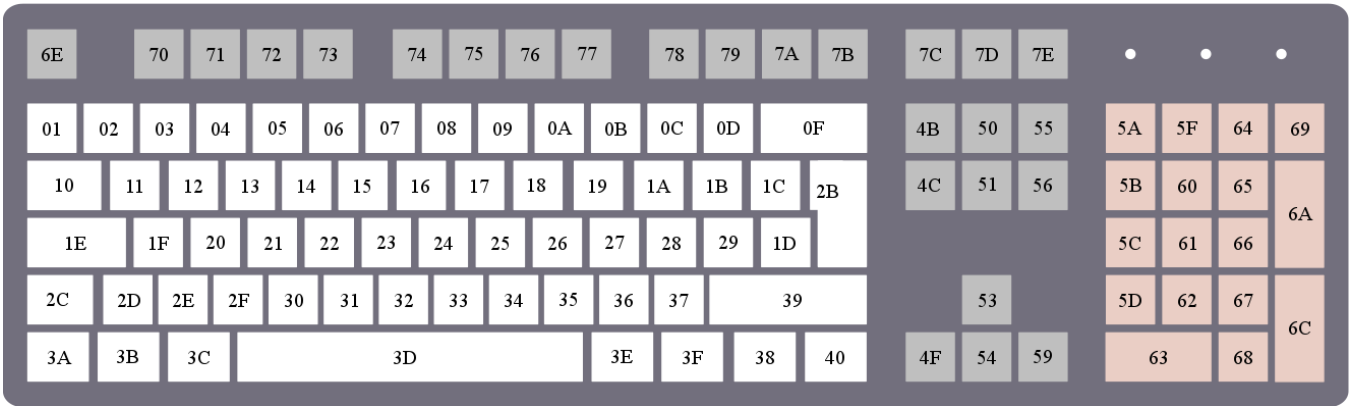

105 Key European Style Keyboard

Newland

SCANNING MADE SIMPLE

Newland EMEA HQ
+31 (0) 345 87 00 33
info@newland-id.com
newland-id.com

D-A-C-H
+49 (6) 182 82916-16
info@newland-id.de

Benelux
+31 (0) 345 87 00 33
benelux@newland-id.com

Italy
+39 (0) 342 0562227
italy@newland-id.com

United Kingdom
+44 (0) 1442 212020
sales@newland-id.co.uk

South Africa
Gauteng: +27 (0) 11 553 8010
Cape Town: +27 (0) 21 9140819
info@newland-id.co.za

Turkey
+90 (0) 544 538 40 49
turkey@newland-id.com

France
+39 (0) 345 8804096
france@newland-id.com

Ibérica
+34 (0) 93 303 74 66
info@newland-id.es

Nordic & Baltic
+46 (0) 70 88 47 767
nordic@newland-id.com

Russia
8 (800) 100 46 22
russia@newland-id.com

Middle East
+39 (0) 345 8804096
middleeast@newland-id.com

Iran
+90 (0) 544 538 40 49
iran@newland-id.com